Service Manual

PIONEER®
The Art of Entertainment

KEH-P4600R/X1M/EW

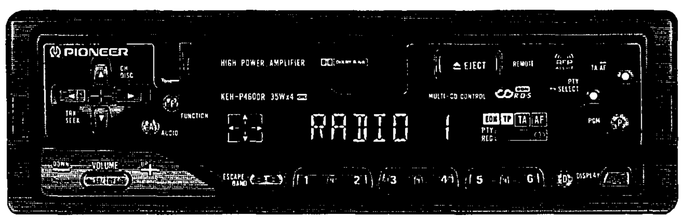

ORDER NO.
CRT2000

MULTI-CD CONTROL HIGH POWER CASSETTE PLAYER WITH RDS TUNER

KEH-P4600R X1M/EW

KEH-P4630R X1M/EW

MULTI-CD CONTROL HIGH POWER CASSETTE PLAYER WITH FM/MW/LW TUNER

KEH-P4610 X1M/EE

NOTE:

- **See the separate manual CX-631(CRT1640) for the cassette mechanism description.**
- **The cassette mechanism assy employed in this model is one of X-2L series**
- **Dolby noise reduction manufactured under license from Dolby Laboratories Licensing Corporation. "Dolby" and the double-D symbol are trademarks of Dolby Laboratories Licensing Corporation.**
- **This service manual does not describe the CD test mode.**
  For the operations in the CD test mode, refer to the CD player's Service Manual.

CONTENTS

1. SAFETY INFORMATION 2
2. EXPLODED VIEWS AND PARTS LIST 3
3. SCHEMATIC DIAGRAM 12
4. PCB CONNECTION DIAGRAM 24
5. ELECTRICAL PARTS LIST 36
6. ADJUSTMENT 47
7. GENERAL INFORMATION 51
   7.1 PARTS 51
      7.1.1 IC 51
      7.1.2 DISPLAY 56
   7.2 DIAGNOSIS 59
      7.2.1 DISASSEMBLY 59
   7.3 BLOCK DIAGRAM 60
8. OPERATIONS AND SPECIFICATIONS 62

PIONEER ELECTRONIC CORPORATION 4-1, Meguro 1-Chome, Meguro-ku, Tokyo 153, Japan
PIONEER ELECTRONICS SERVICE INC. P.O.Box 1760, Long Beach, CA 90801-1760 U.S.A.
PIONEER ELECTRONIC [EUROPE] N.V. Haven 1087 Keetberglaan 1, 9120 Melsele, Belgium
PIONEER ELECTRONICS ASIACENTRE PTE.LTD. 501 Orchard Road, #10-00, Lane Crawford Place, Singapore 0923

© PIONEER ELECTRONIC CORPORATION 1997

K-FFM. FEB. 1997 Printed in Belgium

3. SCHEMATIC DIAGRAM

3.1 OVERALL CONNECTION DIAGRAM(GUIDE PAGE)

Note: When ordering service parts, be sure to refer to "EXPLODED VIEWS AND PARTS LIST" or "ELECTRICAL PARTS LIST".

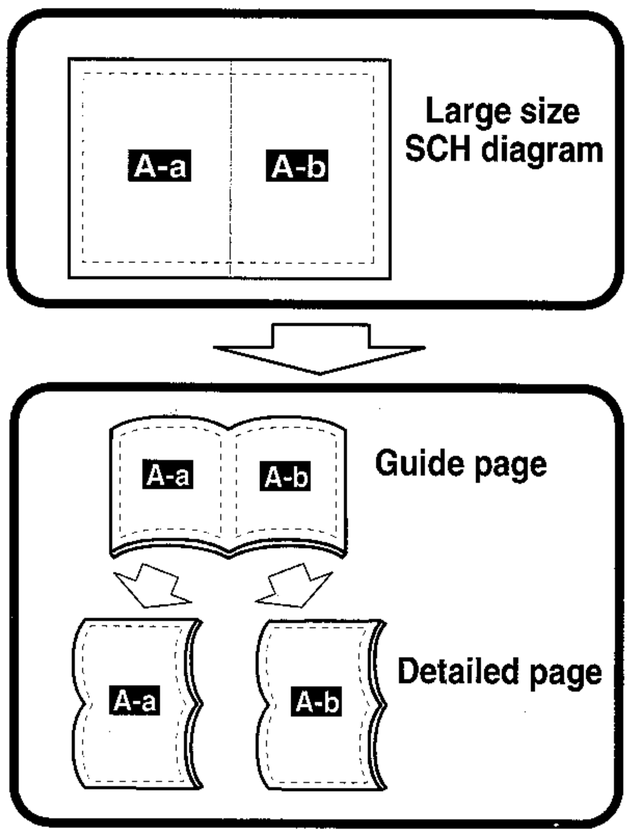

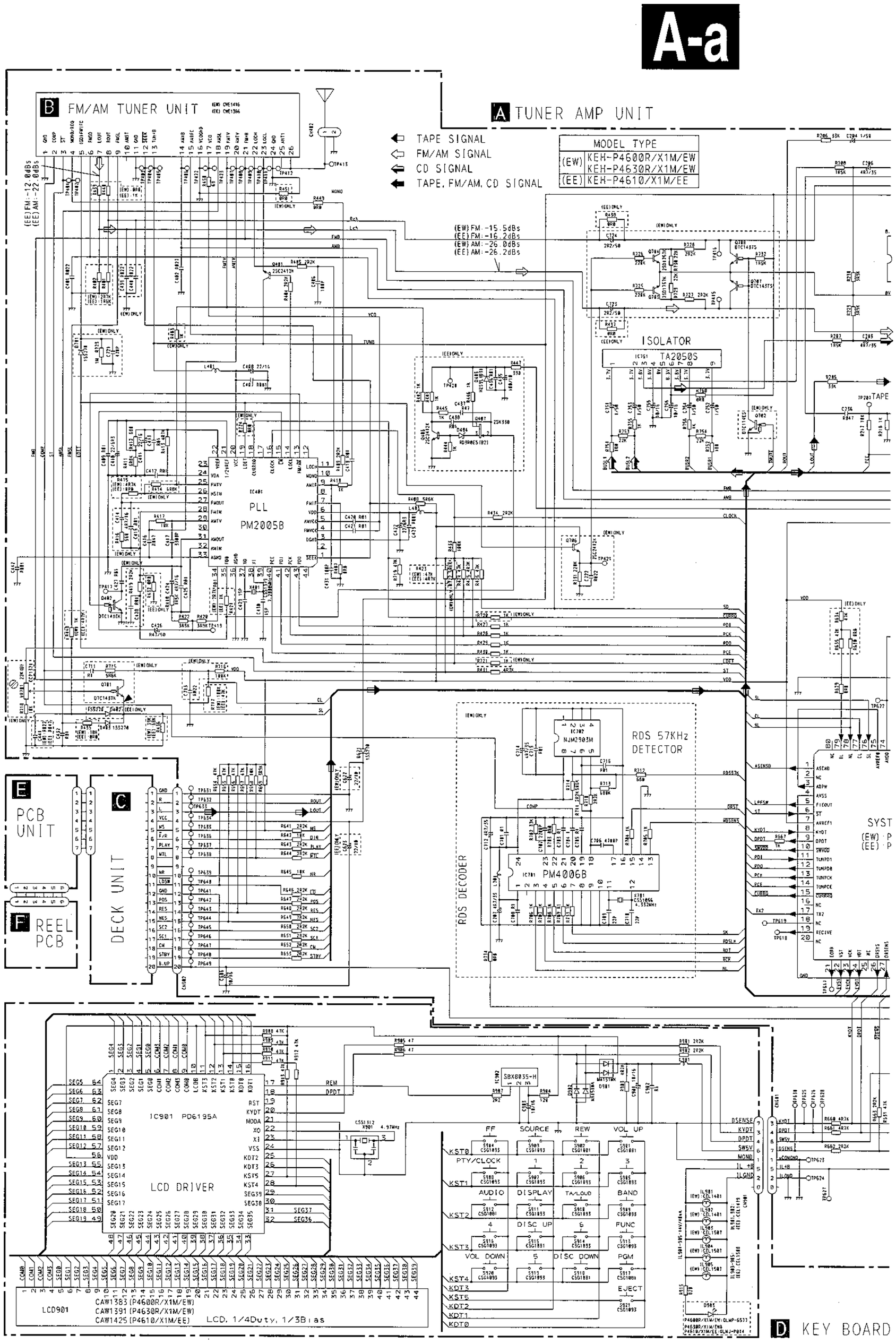

A-b

NOTE:

Symbol indicates a resistor.
No differentiation is made between chip resistors and discrete resistors.

Symbol indicates a capacitor.
No differentiation is made between chip capacitors and discrete capacitors.

Decimal points for resistor and capacitor fixed values are expressed as:
2.2→2R2
0.022→R022

The ⚠ mark found on some component parts indicates the importance of the safety factor of the part. Therefore, when replacing, be sure to use parts of identical designation.

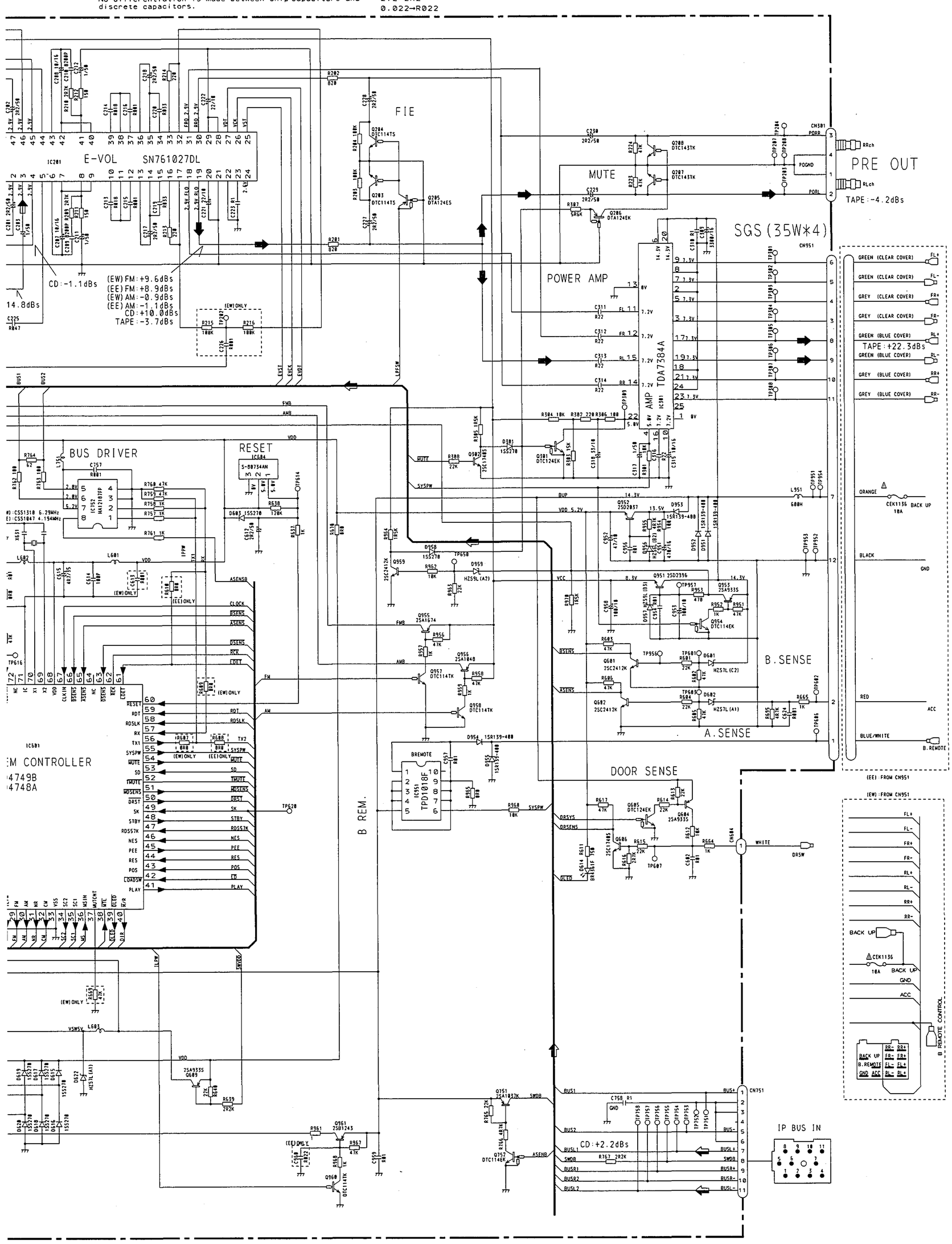

Fig. 6

UNIT

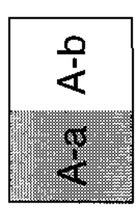
A-b
A-a

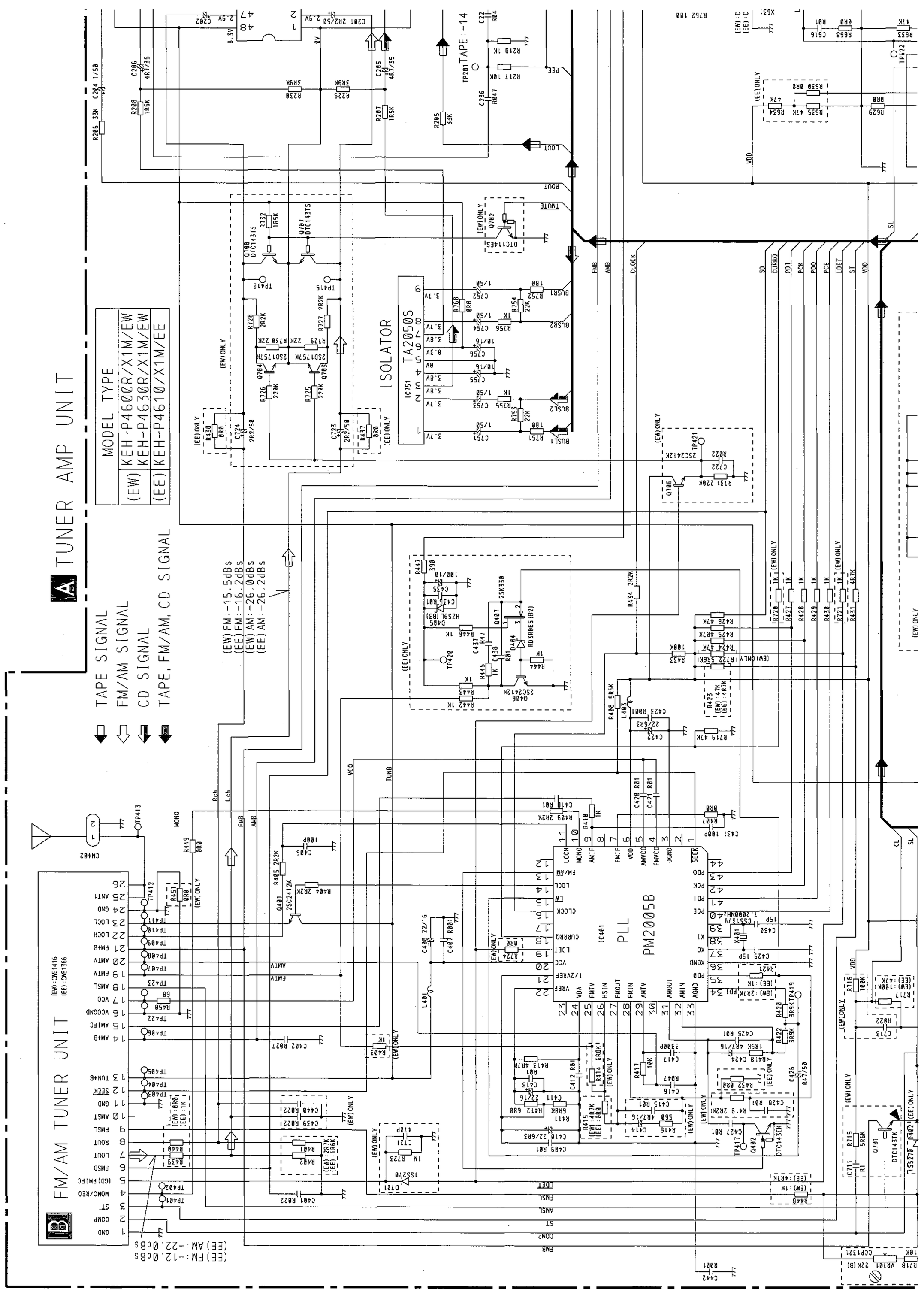
TUNER AMP UNIT
MODEL TYPE
(EW) KEH-P4600R/X1M/EW
KEH-P4630R/X1M/EW
(EE) KEH-P4610/X1M/EE
TAPE SIGNAL
FM/AM SIGNAL
CD SIGNAL
TAPE, FM/AM, CD SIGNAL
(EW) FM: -15.5dBs
(EE) FM: -16.2dBs
(EW) AM: -26.0dBs
(EE) AM: -26.2dBs
ISOLATOR
IC751 TA2050S
FM/AM TUNER UNIT
(EW): CWE1416
(EE): CWE1366
PLL
IC401 PM2005B
(EE) FM: -12.0dBs
(EE) AM: -22.0dBs

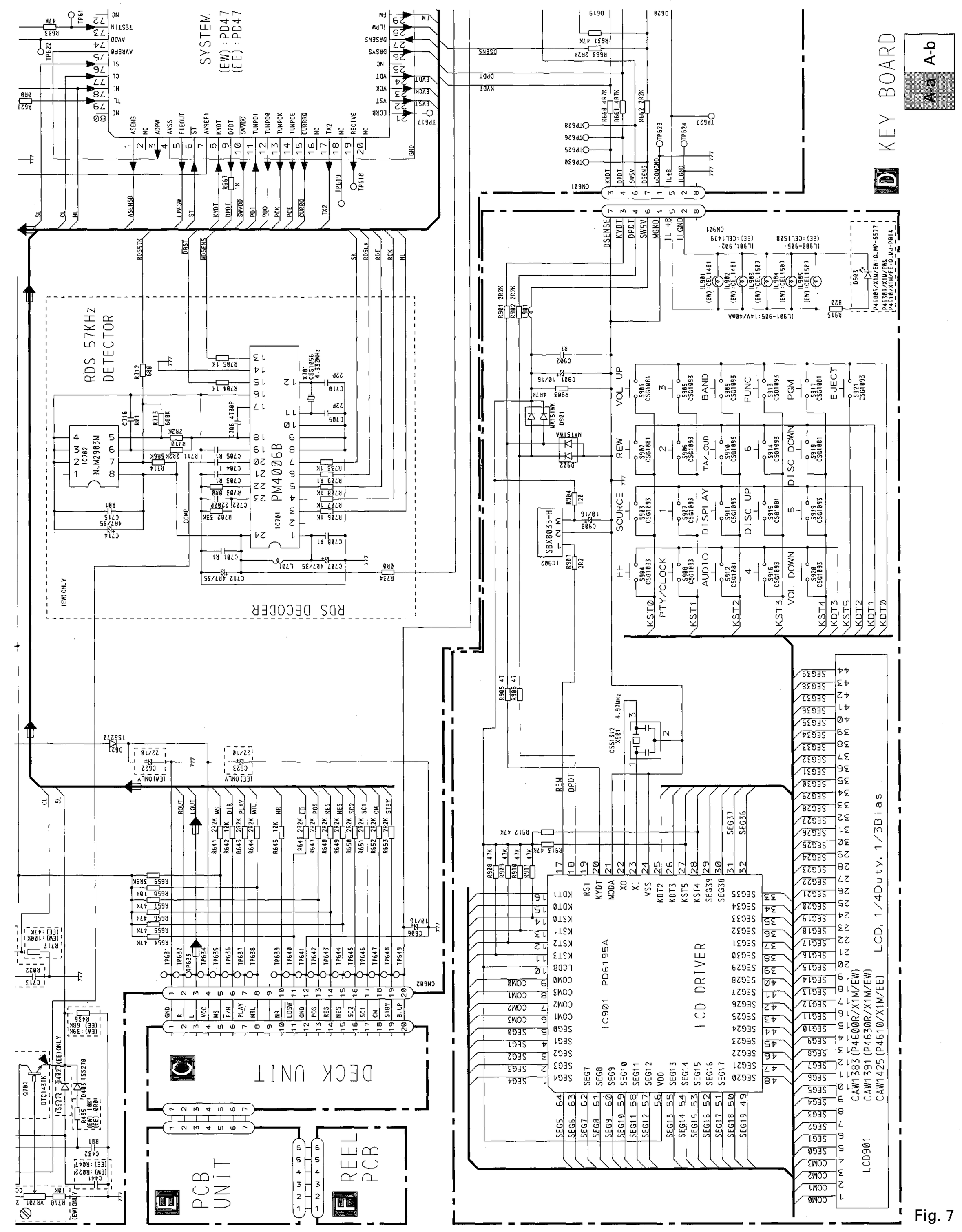
SYSTEM
(EW) : PD47
(EE) : PD47
RDS 57KHz DETECTOR
RDS DECODER
PM4006B
IC701
NJM2903M
IC702
SBX0035-H
IC902
IC901 PD6195A
LCD DRIVER
LCD901
CAW1383 (P4600R/X1M/EW)
CAW1391 (P4630R/X1M/EW)
CAW1425 (P4610/X1M/EE)
LCD, 1/4Duty, 1/3Bias
DECK UNIT
PCB UNIT
REEL PCB
KEY BOARD
A-a
A-b
VOL UP
REW
SOURCE
FF
PTY/CLOCK
BAND
TA/LOUD
DISPLAY
AUDIO
FUNC
DISC UP
PGM
DISC DOWN
EJECT
VOL DOWN
(EW) ONLY
(EE) ONLY

Fig. 7

A-a A-b

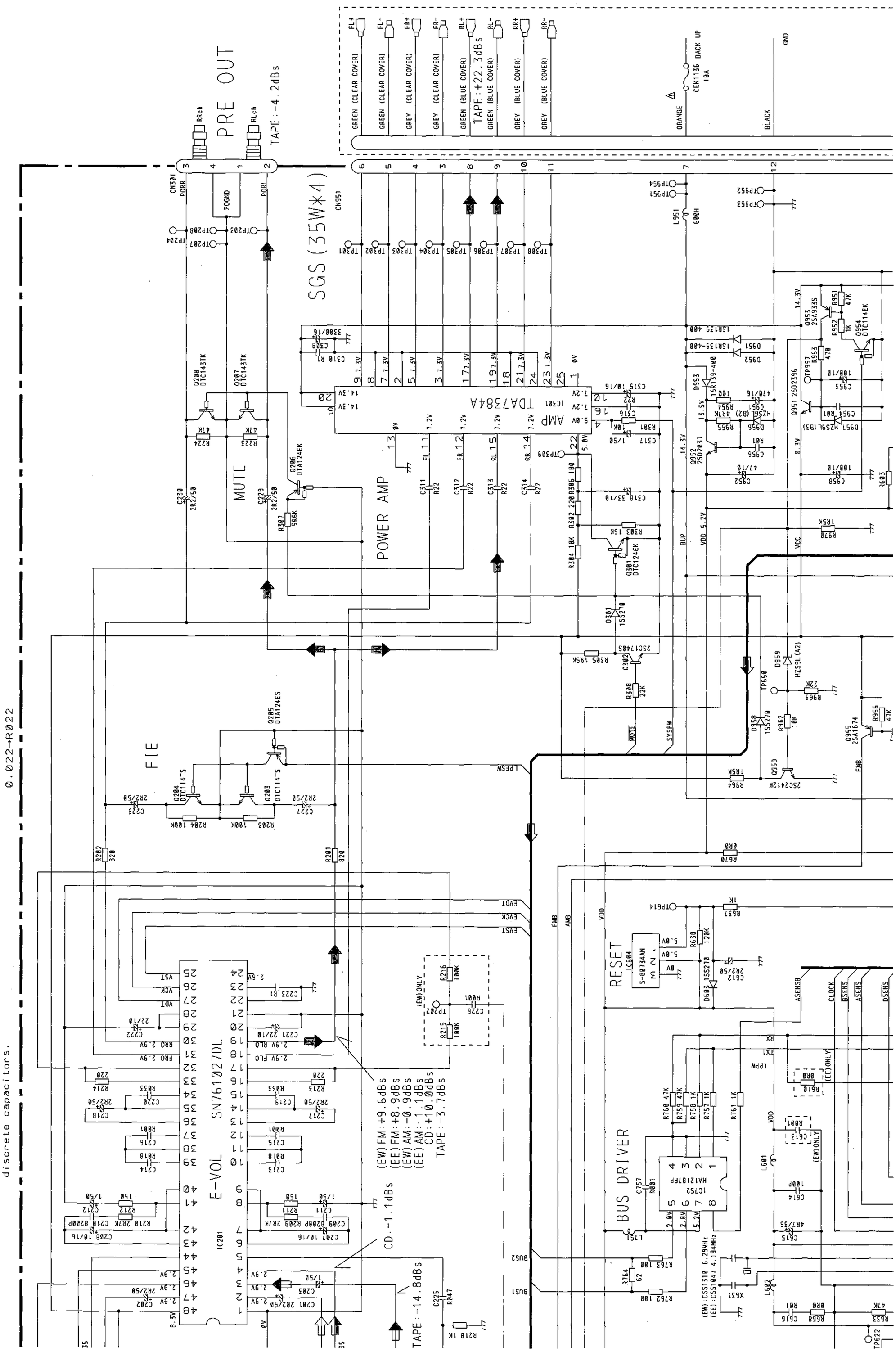

The ⚠ mark found on some component parts indicates the importance of the safety factor of the part. Therefore, when replacing, be sure to use parts of identical designation.

Decimal points for resistor and capacitor fixed values are expressed as:
2.2→2R2
0.022→R022

NOTE:
Symbol indicates a resistor. No differentiation is made between chip resistors and discrete resistors.
Symbol indicates a capacitor. No differentiation is made between chip capacitors and discrete capacitors.

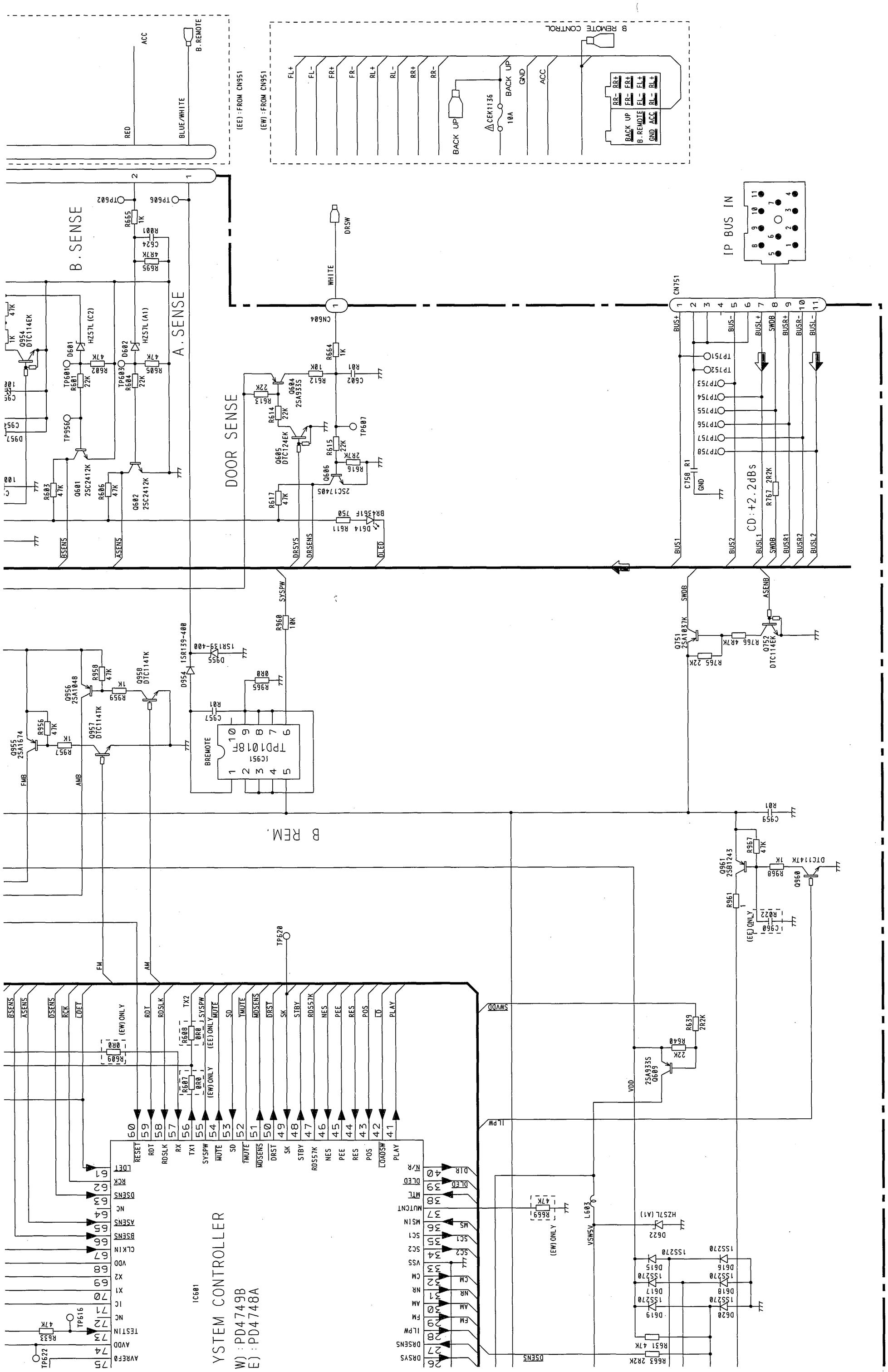
B. SENSE
A. SENSE
DOOR SENSE
B REM.
IP BUS IN
CD:+2.2dBs
YSTEM CONTROLLER
W) : PD4749B
E) : PD4748A
RD UNIT
A-a
A-b

Fig. 8

3.2 FM/AM TUNER UNIT(KEH-P4600R/X1M/EW, P4630R/X1M/EW)

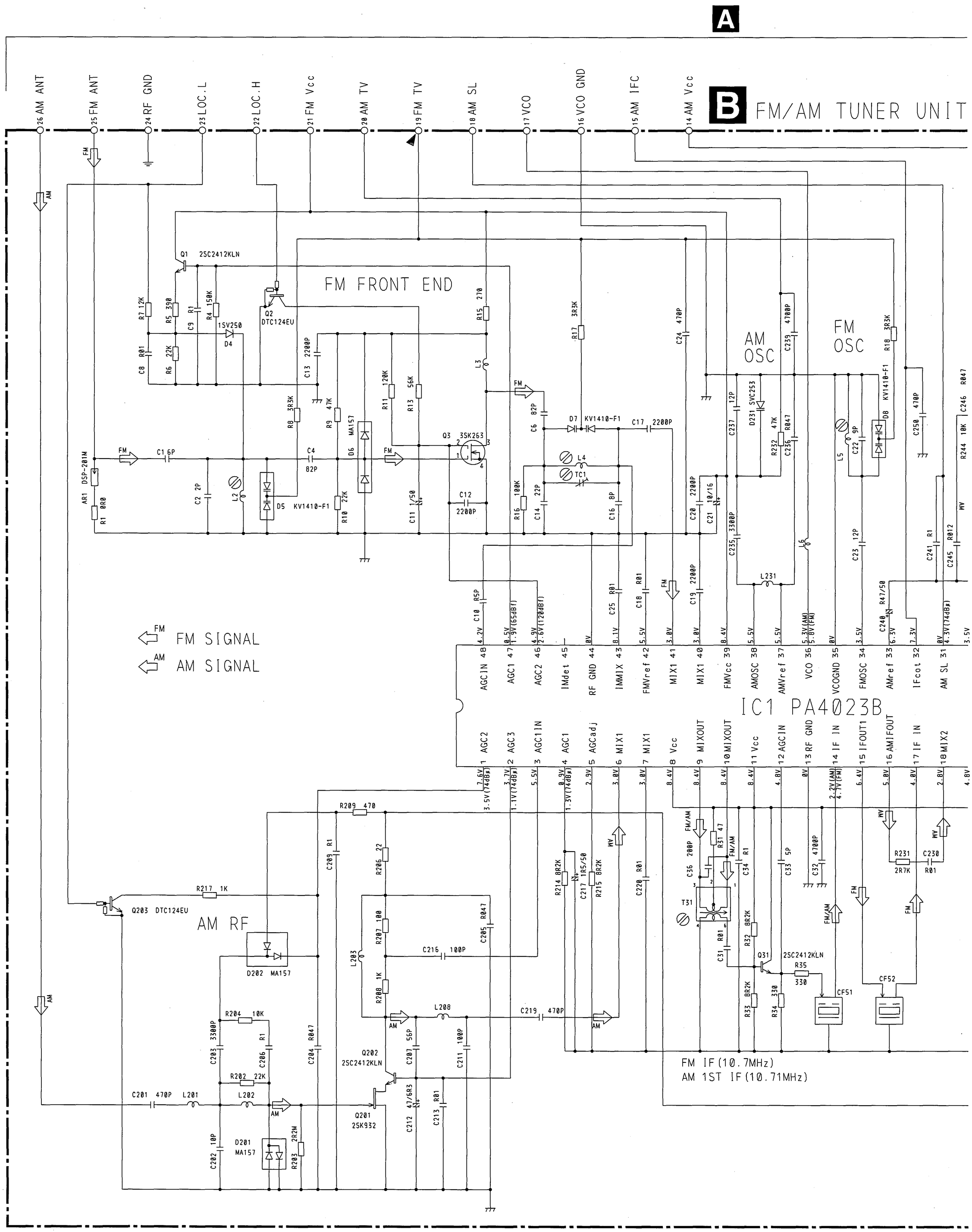

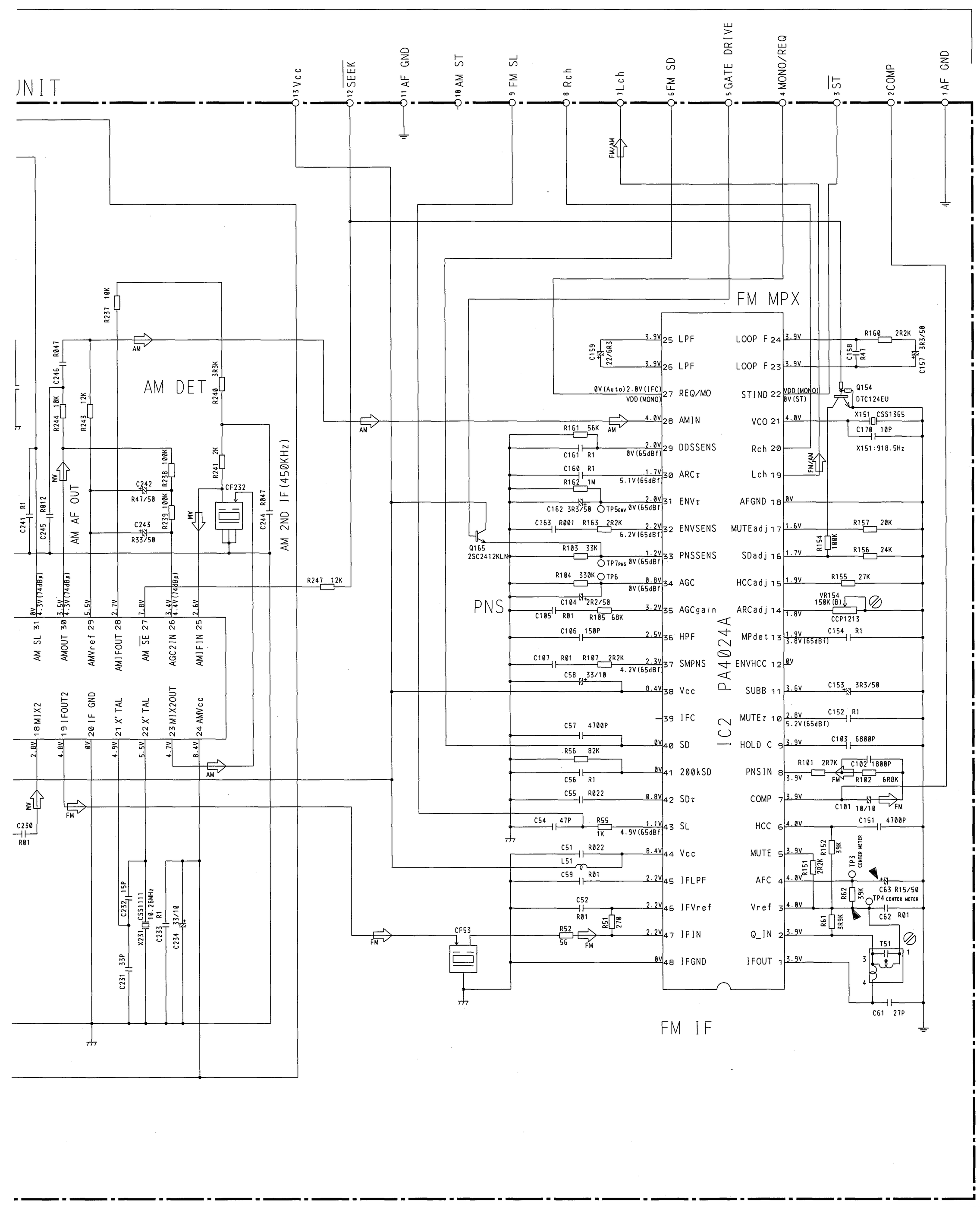
UNIT
AM DET
AM AF OUT
AM 2ND IF (450KHz)
FM MPX
PNS
IC2 PA4024A
FM IF
AM SL 31
AMOUT 30
AMVref 29
AMIFOUT 28
AM SE 27
AGC2IN 26
AMIFIN 25
MIX2 18
IFOUT2 19
IF GND 20
X'TAL 21
X'TAL 22
MIX2OUT 23
AMVcc 24
13 Vcc
12 SEEK
11 AF GND
10 AM ST
9 FM SL
8 Rch
7 Lch
6 FM SD
5 GATE DRIVE
4 MONO/REQ
3 ST
2 COMP
1 AF GND
25 LPF
26 LPF
27 REQ/MO
28 AMIN
29 DDSSENS
30 ARCτ
31 ENVτ
32 ENVSENS
33 PNSSENS
34 AGC
35 AGCgain
36 HPF
37 SMPNS
38 Vcc
39 IFC
40 SD
41 200kSD
42 SDτ
43 SL
44 Vcc
45 IFLPF
46 IFVref
47 IFIN
48 IFGND
LOOP F 24
LOOP F 23
STIND 22
VCO 21
Rch 20
Lch 19
AFGND 18
MUTEadj 17
SDadj 16
HCCadj 15
ARCadj 14
MPdet 13
ENVHCC 12
SUBB 11
MUTEτ 10
HOLD C 9
PNSIN 8
COMP 7
HCC 6
MUTE 5
AFC 4
Vref 3
Q_IN 2
IFOUT 1
Q165 2SC2412KLN
Q154 DTC124EU
X151 CSS1365
X151:918.5Hz
CF232
CF53
X231 CSS1111 10.26MHz
TP3 CENTER METER
TP4 CENTER METER
T51
VR154 150K(B)
CCP1213

Fig. 9

3.3 TUNER UNIT(KEH-P4610/X1M/EE)

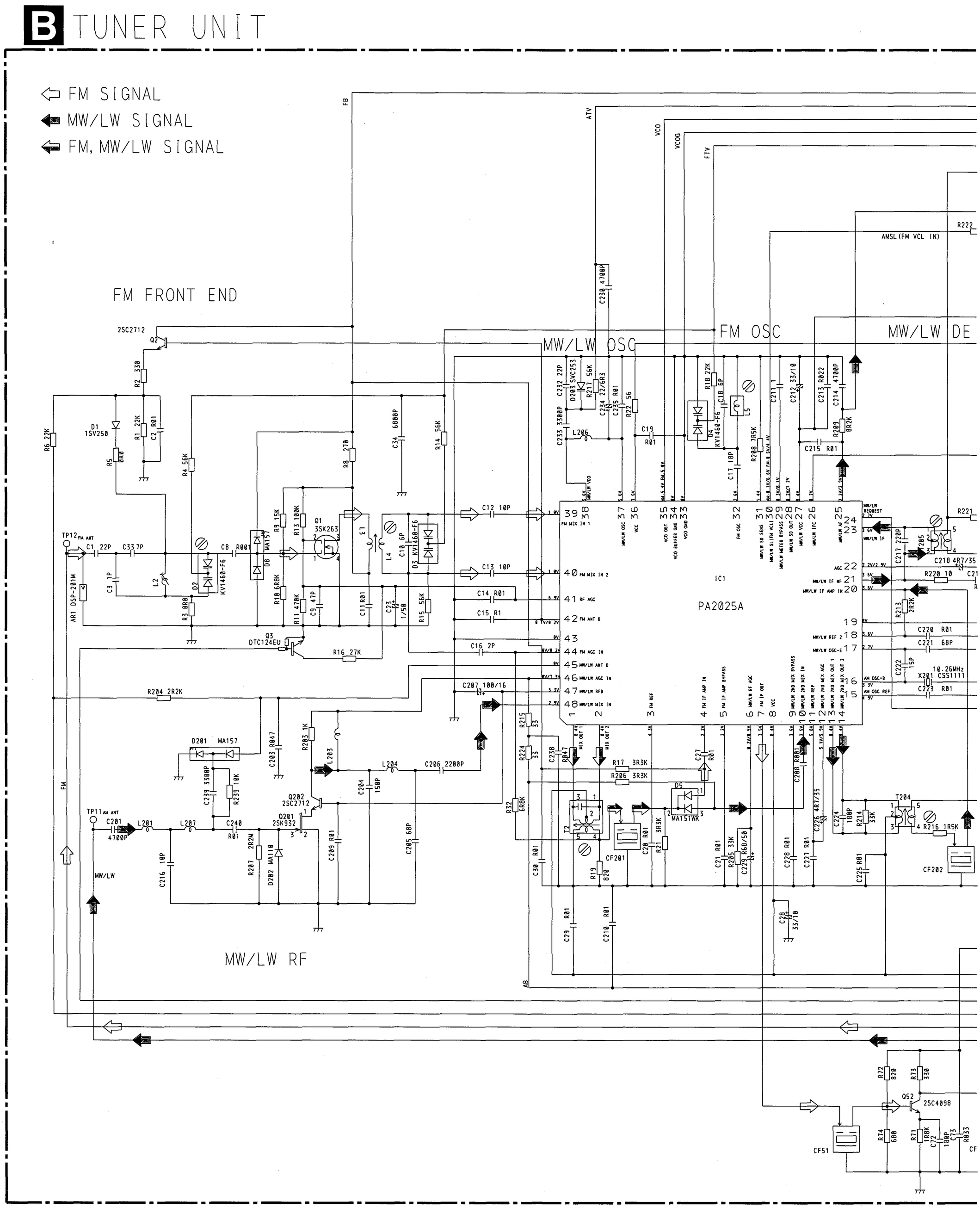

NOTE :

Symbol indicates a resistor.
No differentiation is made between chip resistors and discrete resistors.

Symbol indicates a capacitor.
No differentiation is made between chip capacitors and discrete capacitors.

Decimal points for resistor and capacitor fixed values are expressed as:
2.2→2R2
0.022→R022

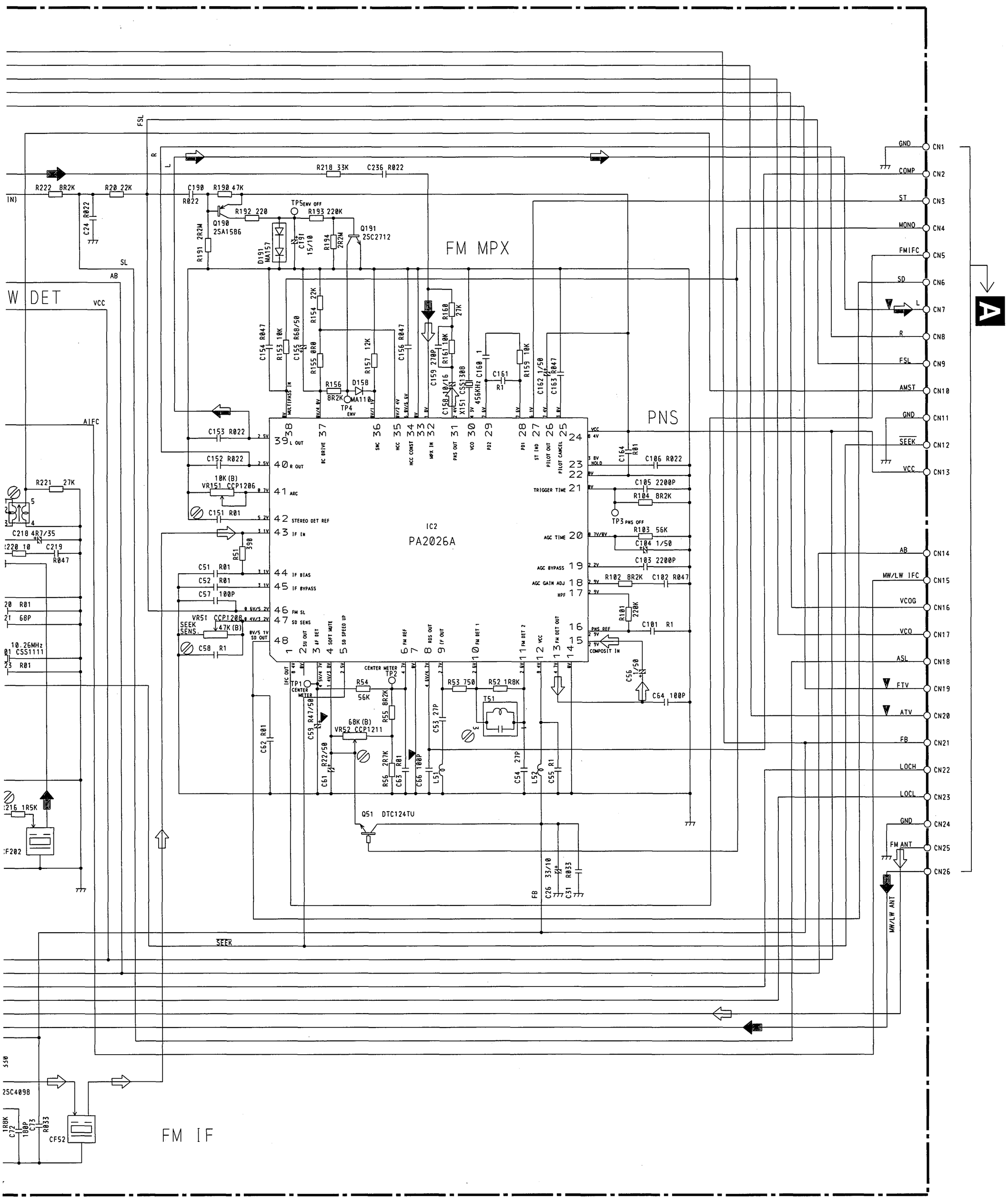
FM MPX
PNS
IC2
PA2026A
FM IF
A
B
GND
COMP
ST
MONO
FMIFC
SD
L
R
FSL
AMST
GND
SEEK
VCC
AB
MW/LW IFC
VCOG
VCO
ASL
FTV
ATV
FB
LOCH
LOCL
GND
FM ANT
MW/LW ANT
SEEK

Fig. 10

3.4 CASSETTE MECHANISM MODULE

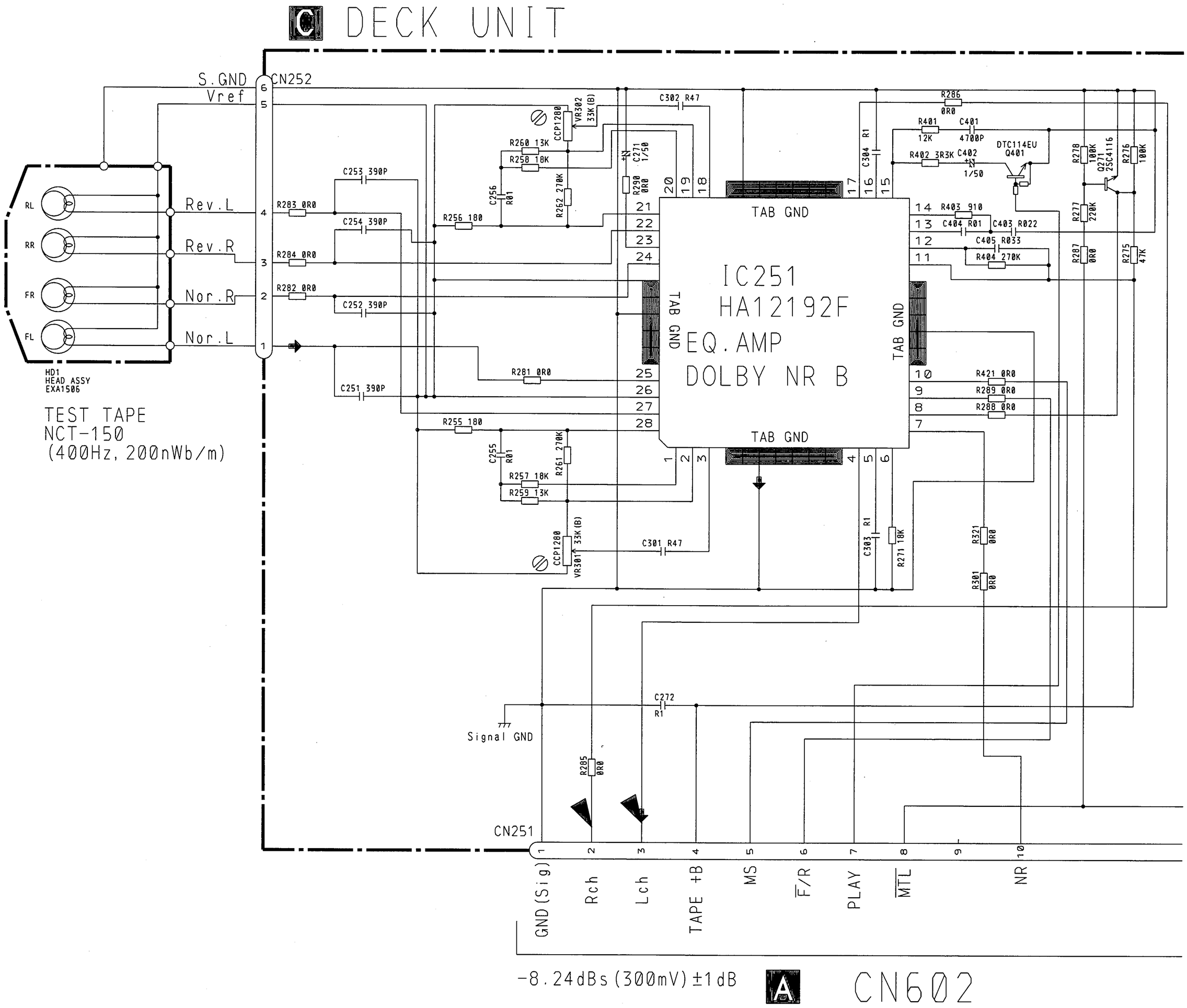

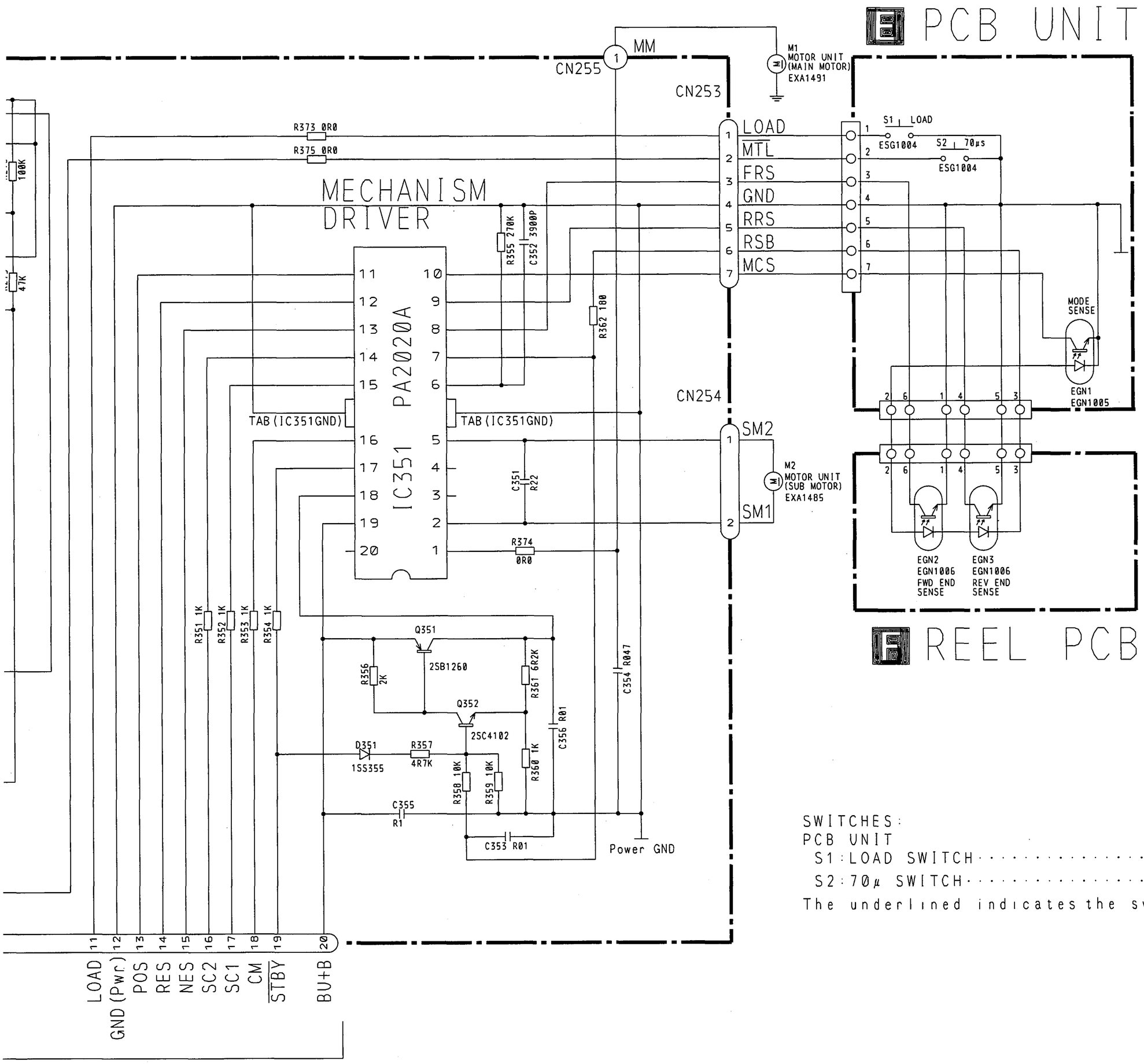

SWITCHES:
PCB UNIT
S1: LOAD SWITCH ..... EJECT-PLAY
S2: 70μ SWITCH ..... ON-OFF
The underlined indicates the switch position.

Fig. 11

7. GENERAL INFORMATION

7.1 PARTS

7.1.1 IC

PA4023B

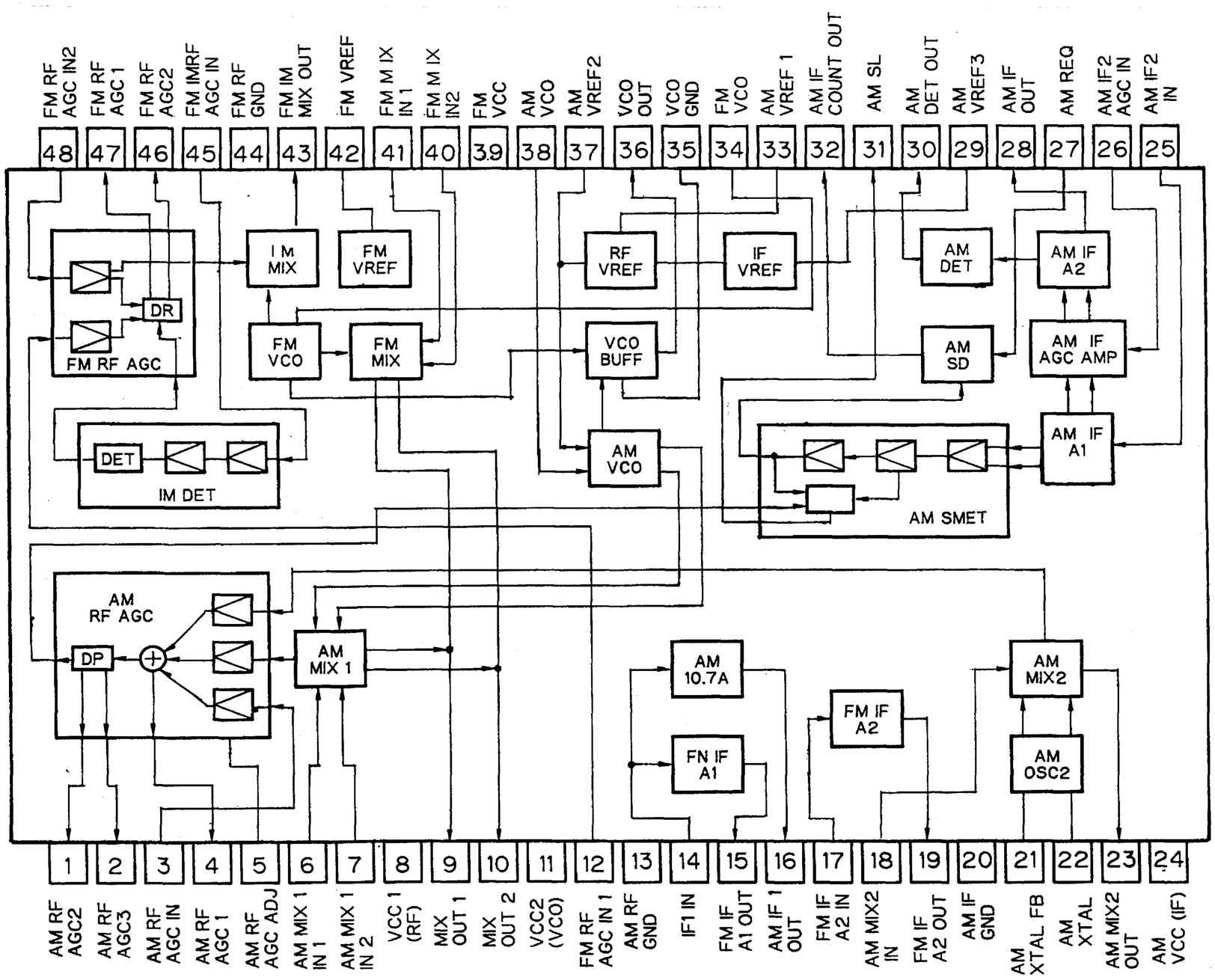

*SN761027DL

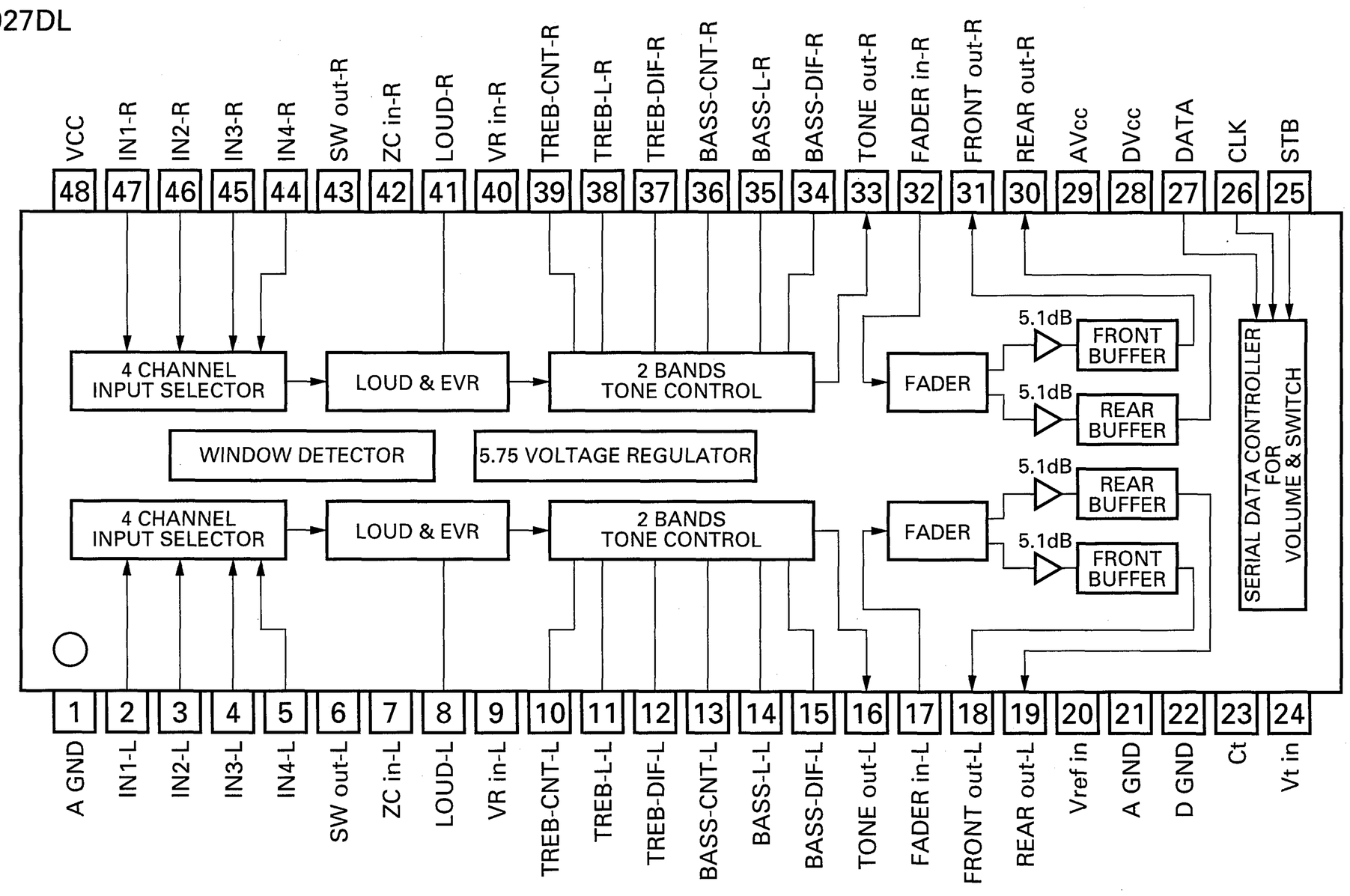

IC's marked by are MOS type.*
Be careful in handling them because they are very liable to be damaged by electrostatic induction.

TDA7384A

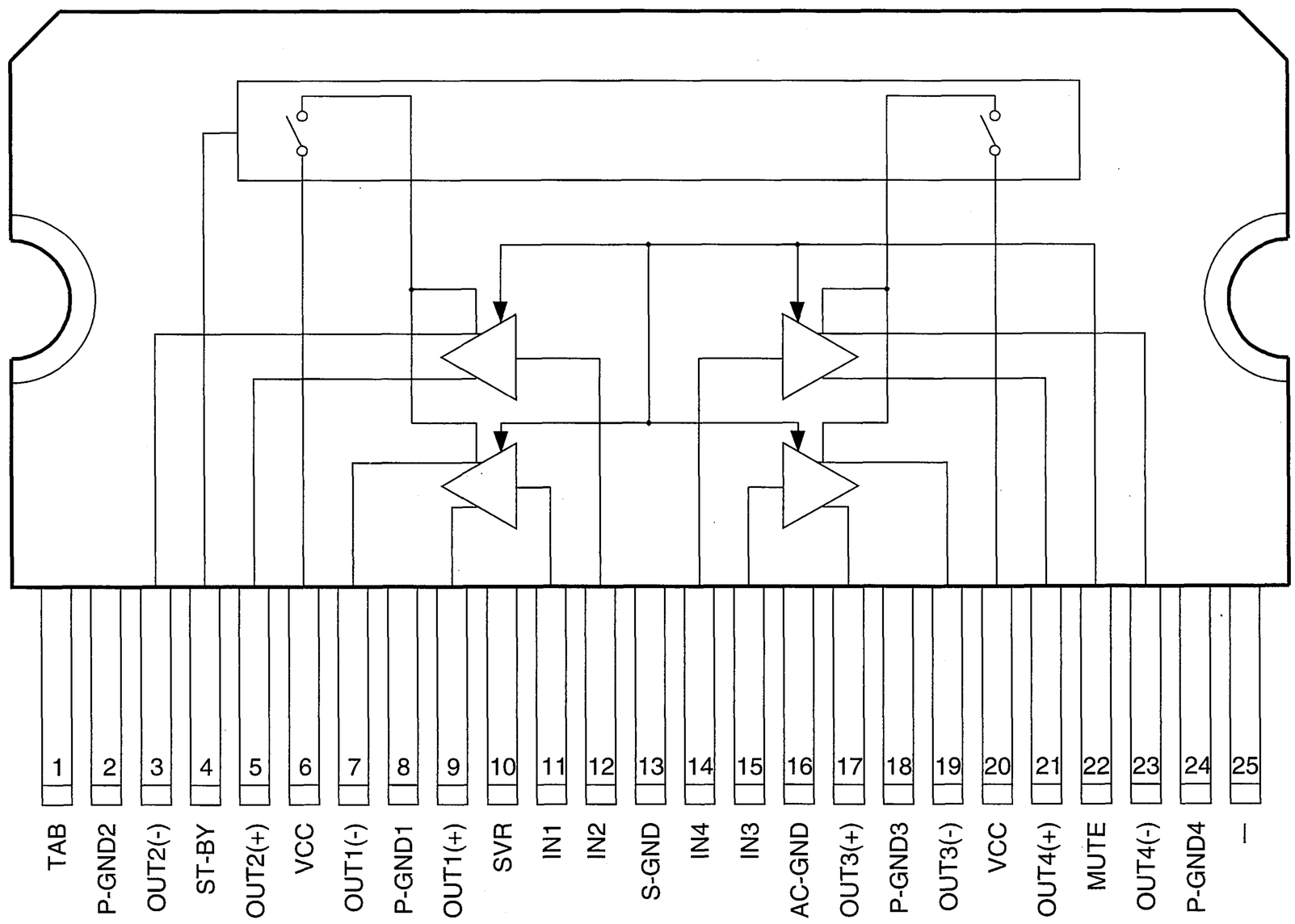

PM2005B

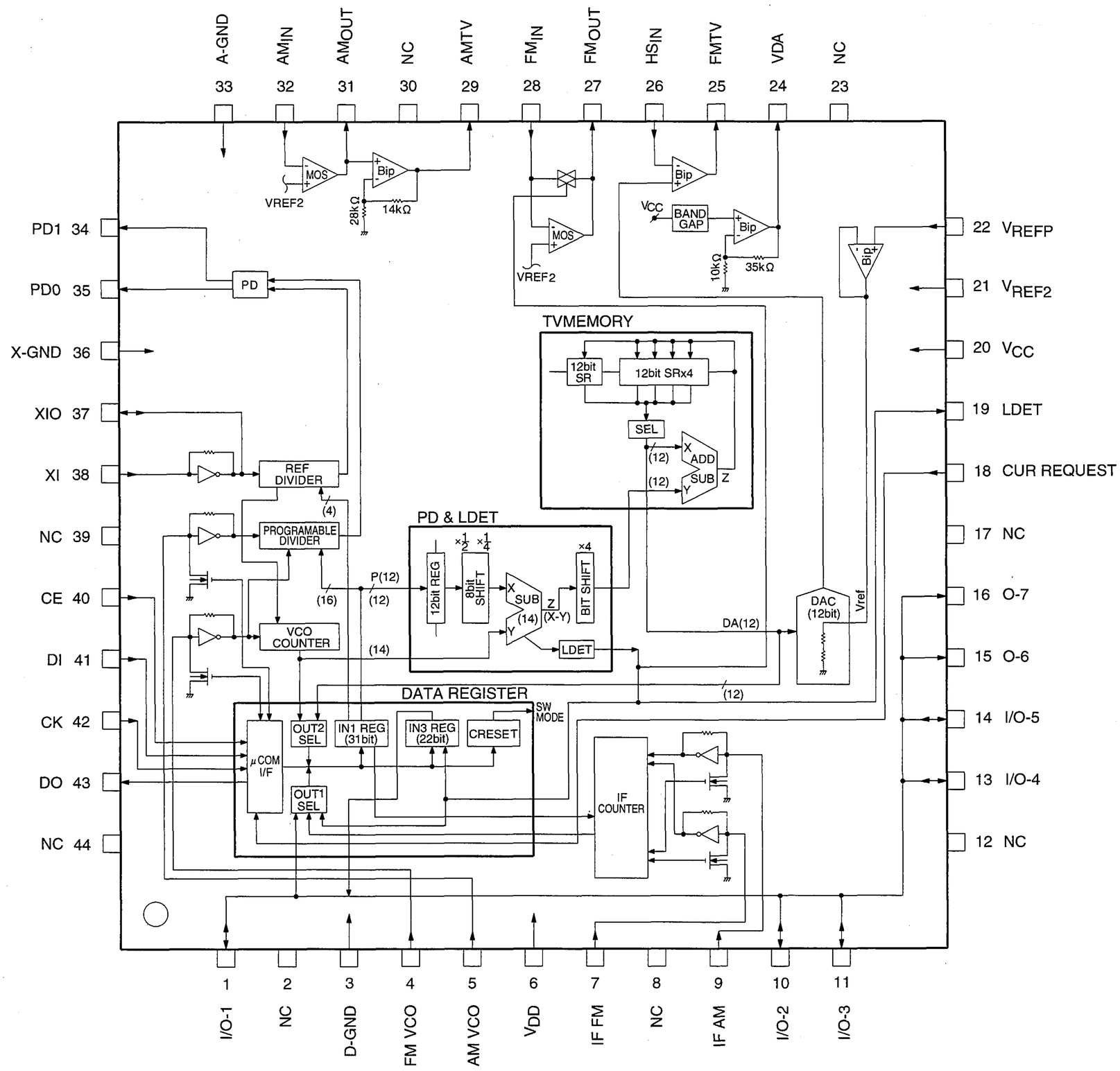

● Pin Functions (PD4749B:EW,PD4748A:EE)

Pin No.	Pin Name	I/O	Format	Function and Operation
1	ASENB	O	C	ASENB output
2	NC			Not used
3	ADPW	O	C	Control output for analog input reference power
4	AVSS			A/D GND
5	FIEOUT	O	C	LPF switch
6	$\overline{ST}$	I		FM stereo input
7	AVREF1			(D/A converter standard voltage)
8	KYDT	I		Key data input
9	DPDT	O	C	Key data output
10	$\overline{SWVDD}$	O	C	Grille power supply control output
11	TUNPD1	I		PLL IC data input
12	TUNPD0	O	C	PLL IC data output
13	TUNPCK	O	C	PLL IC clock
14	TUNPCE	O	C	PLL IC chip enable
15	$\overline{CURRRQ}$	O	C	Tuner voltage FIX output
16	NC			Not used
17	TX2	O	C	IP BUS data output
18	NC			Not used
19	RECIVE	O	C	RDS decoder receive output
20	NC			Not used
21	EORR	O	C	CorrectRDS error output
22	VST	O	C	Strobe pulse output for electronic volume
23	VCK	O	C	Clock output for electronic volume
24	VDT	O	C	Data output for electronic volume
25	NC			Not used
26	DRSYS	O	C	Door system select output
27	DRSENS	I		Door open/close sense input
28	ILPW	O	C	Illumination power
29	FM	O	C	FM power control output
30	AM	O	C	AM power control output
31	NR	O	C	Cassette mechanism noise reduction output
32	CM	O	C	Cassette mechanism capstan motor control output
33	VSS			GND
34	SC2	O	C	Cassette mechanism sub motor control output
35	SC1	O	C	Cassette mechanism sub motor control output
36	MSIN	I		Cassette mechanism MS sense input
37	MUTCNT			GND
38	$\overline{MTL}$	I		Cassette mechanism tape select input
39	$\overline{DLED}$	O	N	Alarm LED output
40	$\overline{N}$/R	O	C	Normal reverse input
41	PLAY	O	C	MS gain select output
42	$\overline{LOADSW}$	I		Tape loading input
43	POS	I		Cassette mechanism position sense input
44	RES	I		Cassette mechanism reverse end sense input
45	PEE	O	C	Beep tone output
46	NES	I		Cassette mechanism forward end sense input
47	RDS57K	I		57kHzBP-OUT sense input
48	STBY	O	C	Stand-by output terminal
49	SK	I		SK signal input
50	$\overline{DRST}$	O	C	RDS decoder reset output
51	$\overline{TMUTE}$	O	C	Tuner mute output
52	NC			Not used
53	SD	I		SD input
54	$\overline{MUTE}$	O	C	System mute output
55	SYSPW	O	C	System power supply control output
56	TX1	O	C	IP-BUS output
57	RX	I		IP-BUS input

Pin No.	Pin Name	I/O	Format	Function and Operation
58	RDSLK	I		RDSLK input
59	RDT	I		RDS data input
60	$\overline{\text{RESET}}$	I		Reset input
61	RX	I		IP BUS input
62	NC			Not used
63	$\overline{\text{DSENS}}$	I		Grille detach sense
64	NC			Not used
65	$\overline{\text{ASENS}}$	I		ACC power sense input
66	$\overline{\text{BSENS}}$	I		Back up power sense input
67	CKIN	I		Clock input
68	VDD			Power supply
69	X2			Crystal oscillator connection pin
70	X1			Crystal oscillator connection pin
71	IC			GND
72	NC			Not used
73	TESTIN	I		Test program mode input
74	AVDD			Positive power supply terminal for analog circuit
75	AVREF0			GND
76	SL	I		SD level input from tuner
77	CL	I		Synchronizing signal input of display data latch
78	NL	I		RDS noise level input
79	TL	I		Trigger level input
80	NC			Not used

*PD4749B,PD4748A

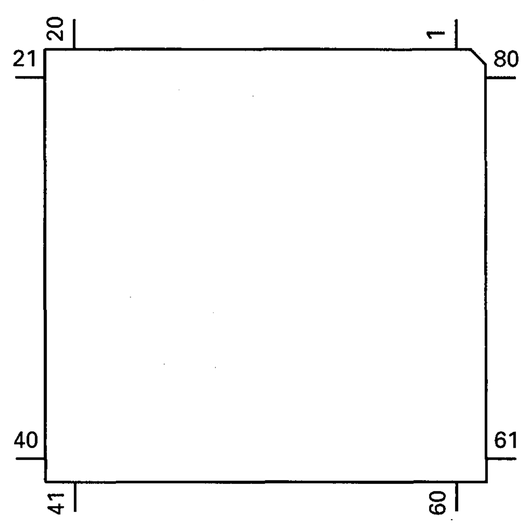

Format	Meaning
C	C MOS
N	N channel open drain

PM4006B

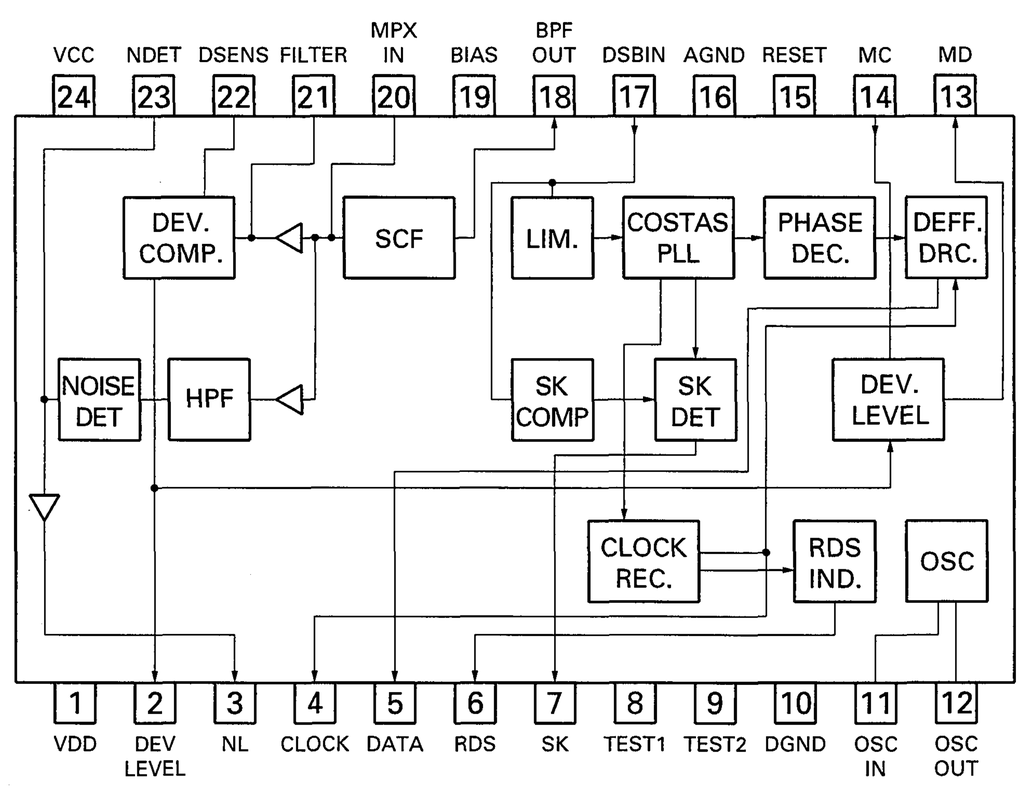

HA12192F

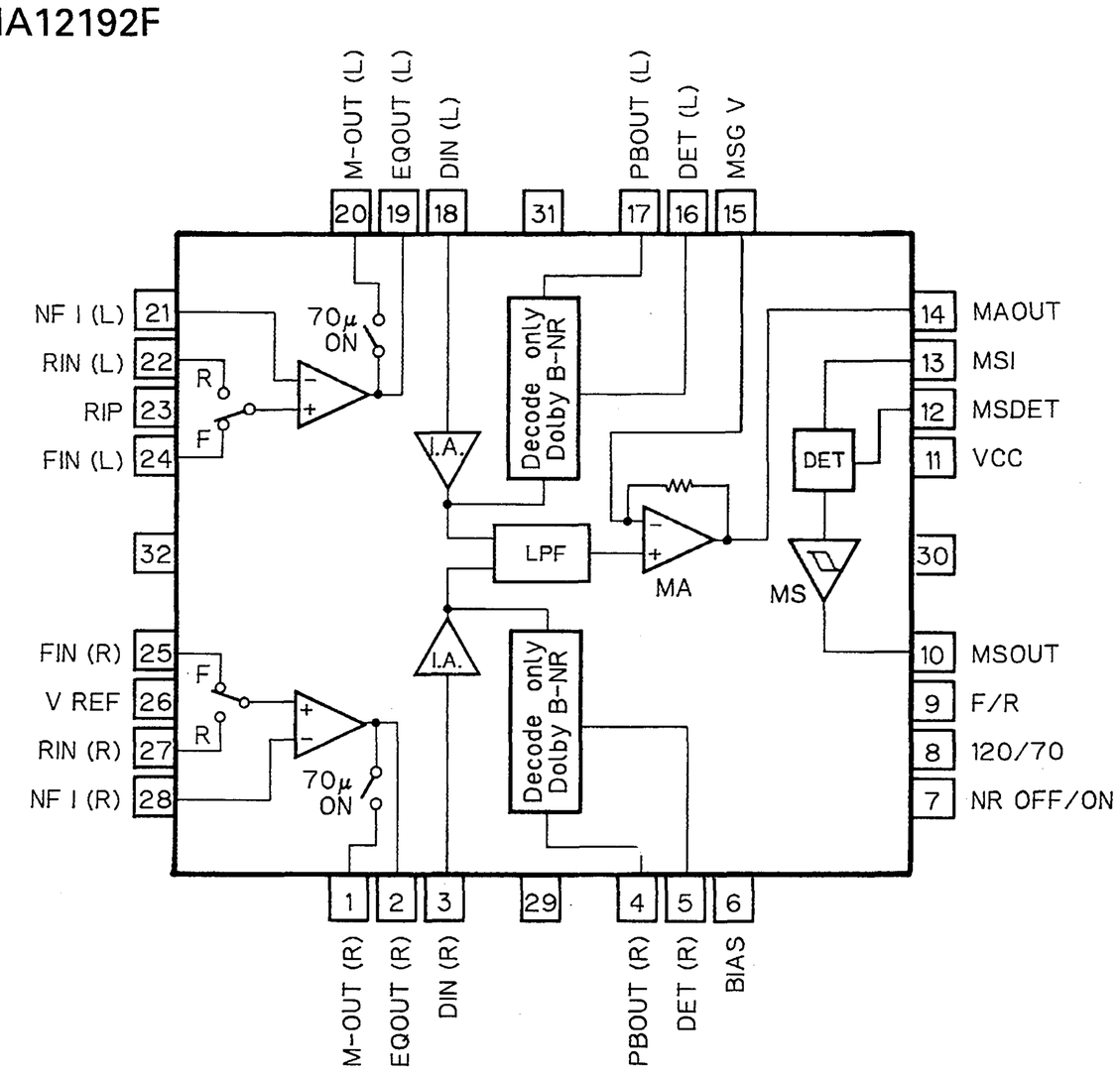

● Pin Functions (PD6195A)

Pin No.	Pin Name	I/O	Format	Function and Operation
1–5	SEG4-0	O		LCD segment output
6–9	COM3-0	O		LCD Common driver output
10	LCDB			LCD bias power supply
11–14	KS4-1	O	N	Key strobe output
15,16	KD0,1	I		Key data input
17	REM	I		Remote control reception
18	DPDT	I		UART input
19	RST	I		System reset
20	SO	O	C	UART output
21	KYDT			(VSS)
22	X0			Crystal oscillator connection pin
23	X1			Crystal oscillator connection pin
24	VSS			GND
25,26	KD2,3	I		Key data input
27,28	KS5,4	O	N	Key strobe output
29–55	SEG39-13	O		LCD segment output
56	VDD			Power
57–64	SEG12-5	O		LCD segment output

*PD6195A

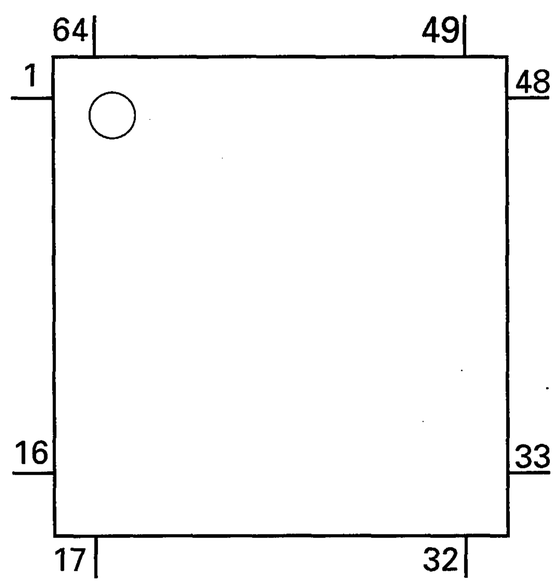

Format	Meaning
C	C MOS
N	N channel open drain

SBX8035-H

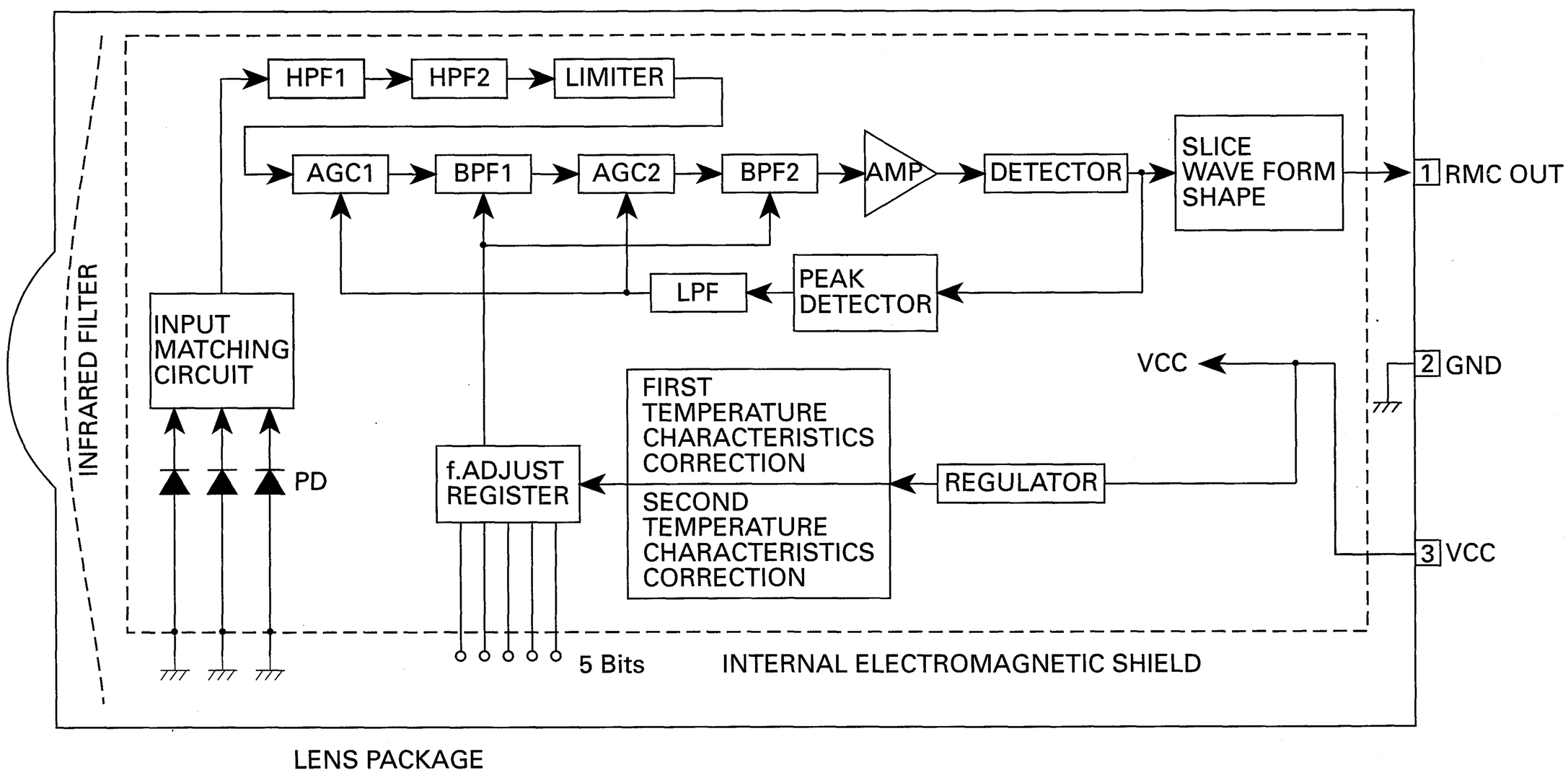

7.1.2 DISPLAY

● CAW1383 (KEH-P4600R/X1M/EW)

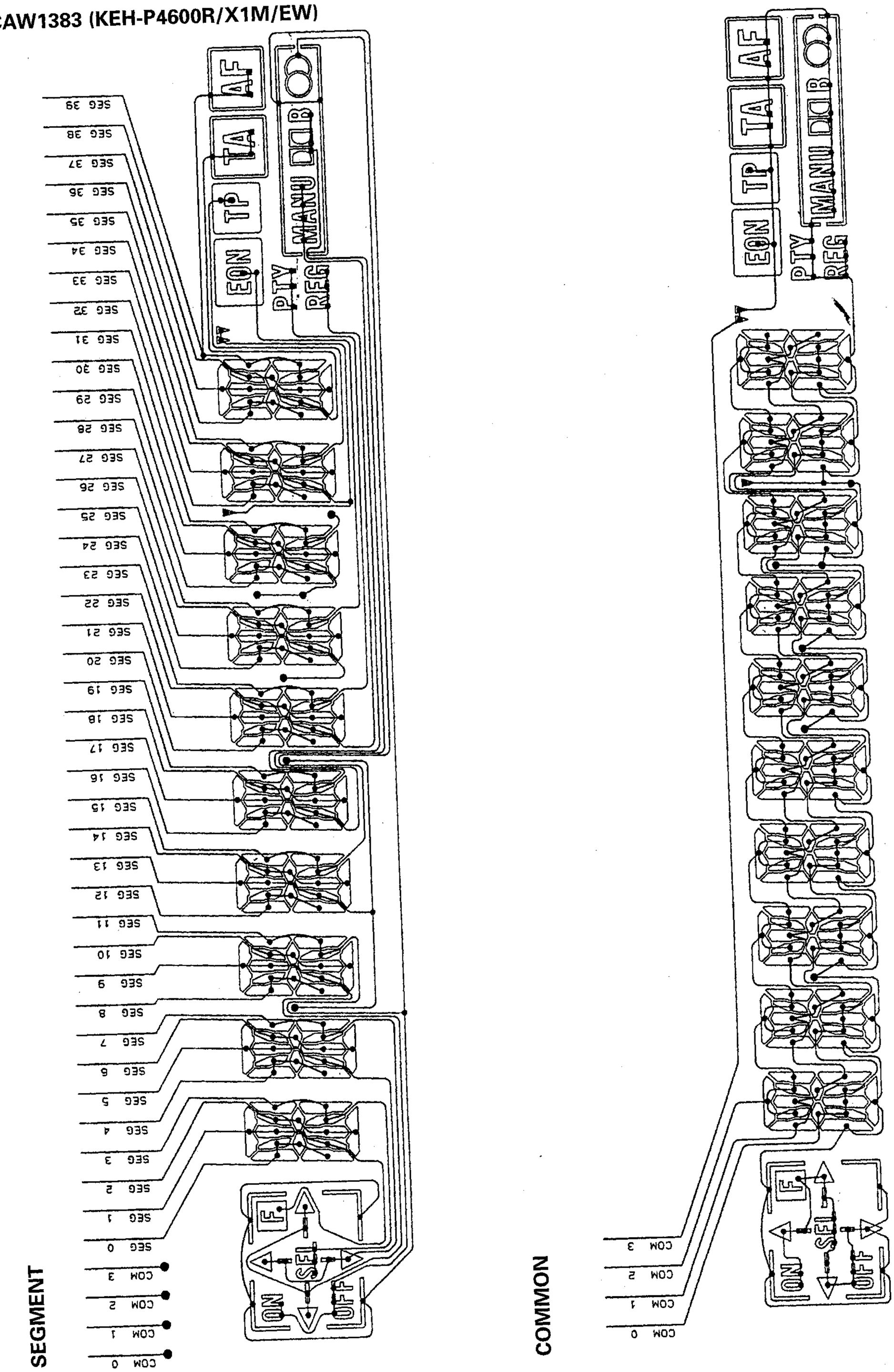

Fig. 27

● CAW1391 (KEH-P4630R/X1M/EW)

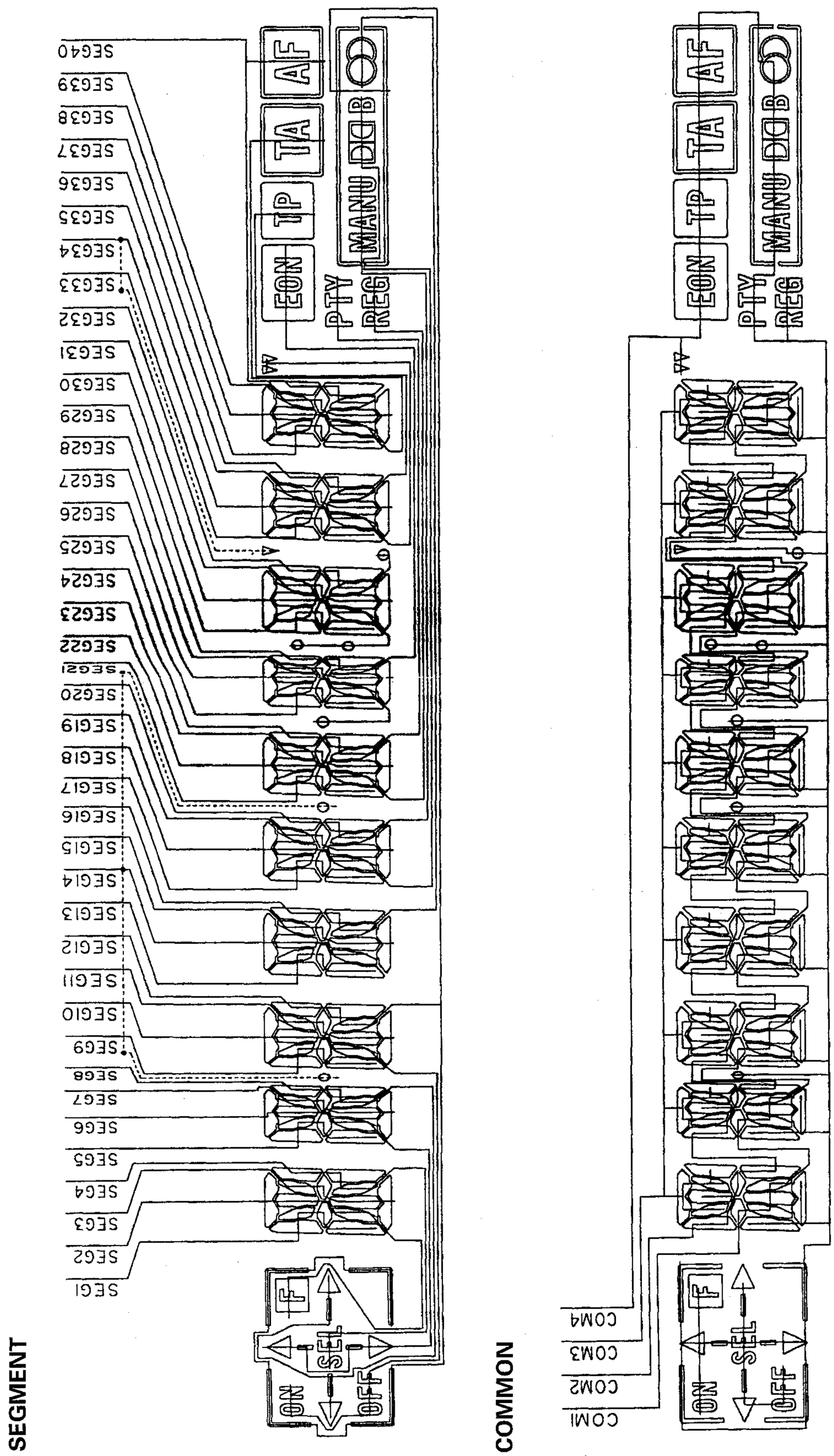

Fig. 28

● CAW1425 (KEH-P4610/X1M/EE)

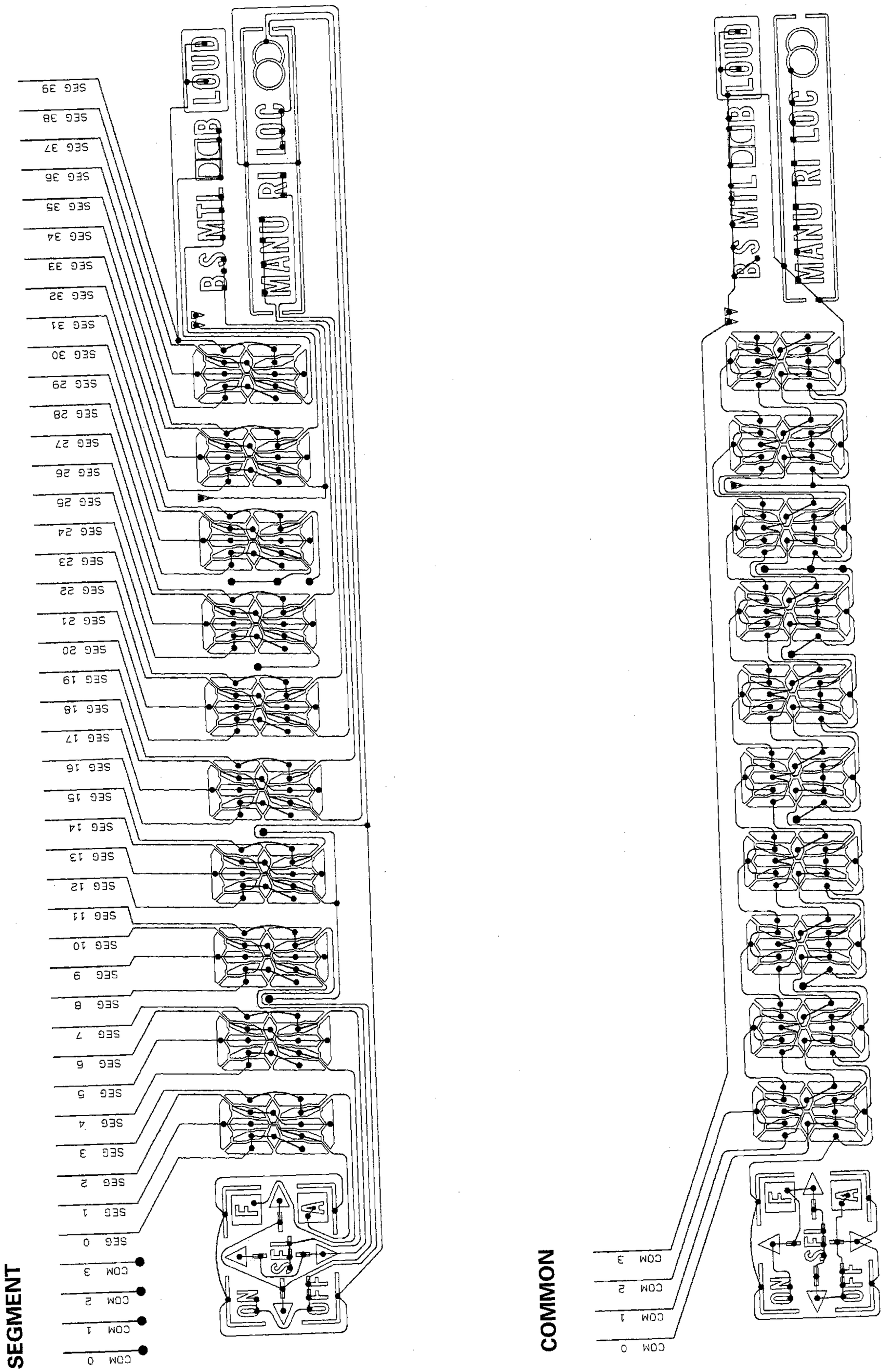

Fig. 29

7.2 DIAGNOSIS

7.2.1 DISASSEMBLY

1. Detach Grille Assy

1. A×3

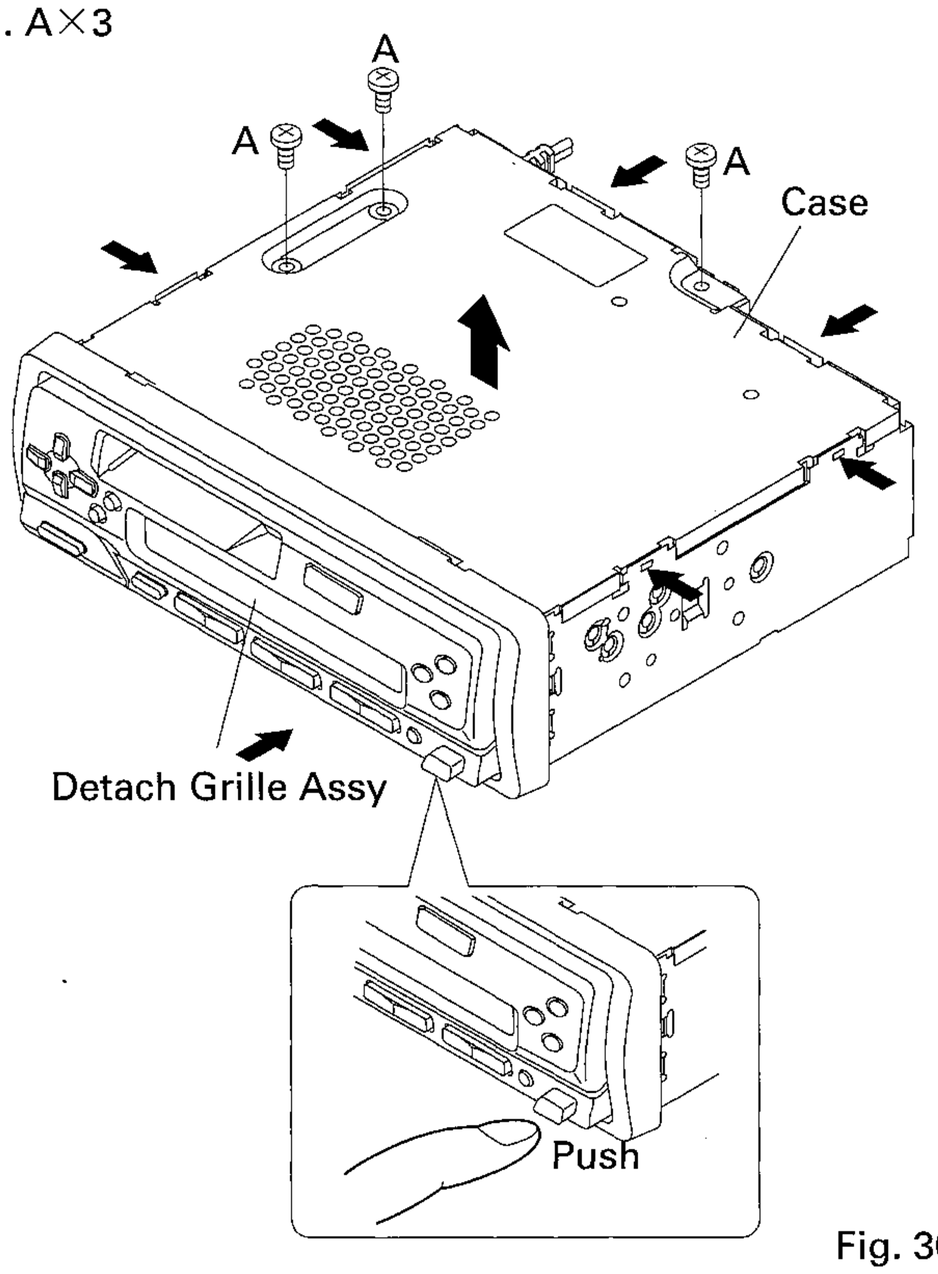

Fig. 30

2. Panel Unit

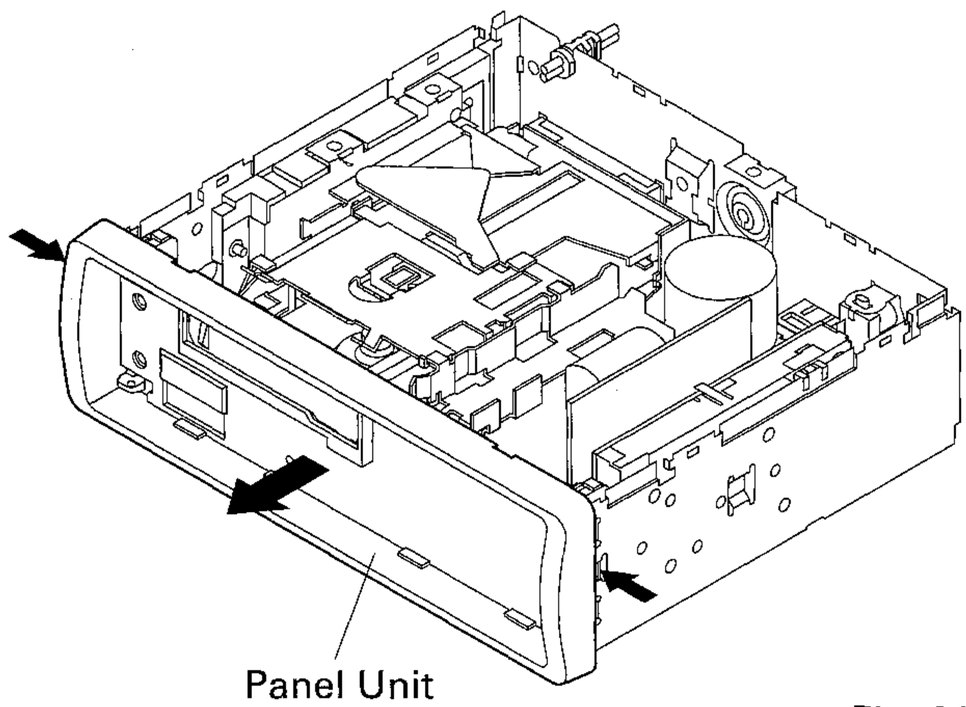

Fig. 31

3. Cassette Mechanism Module

1. A×4

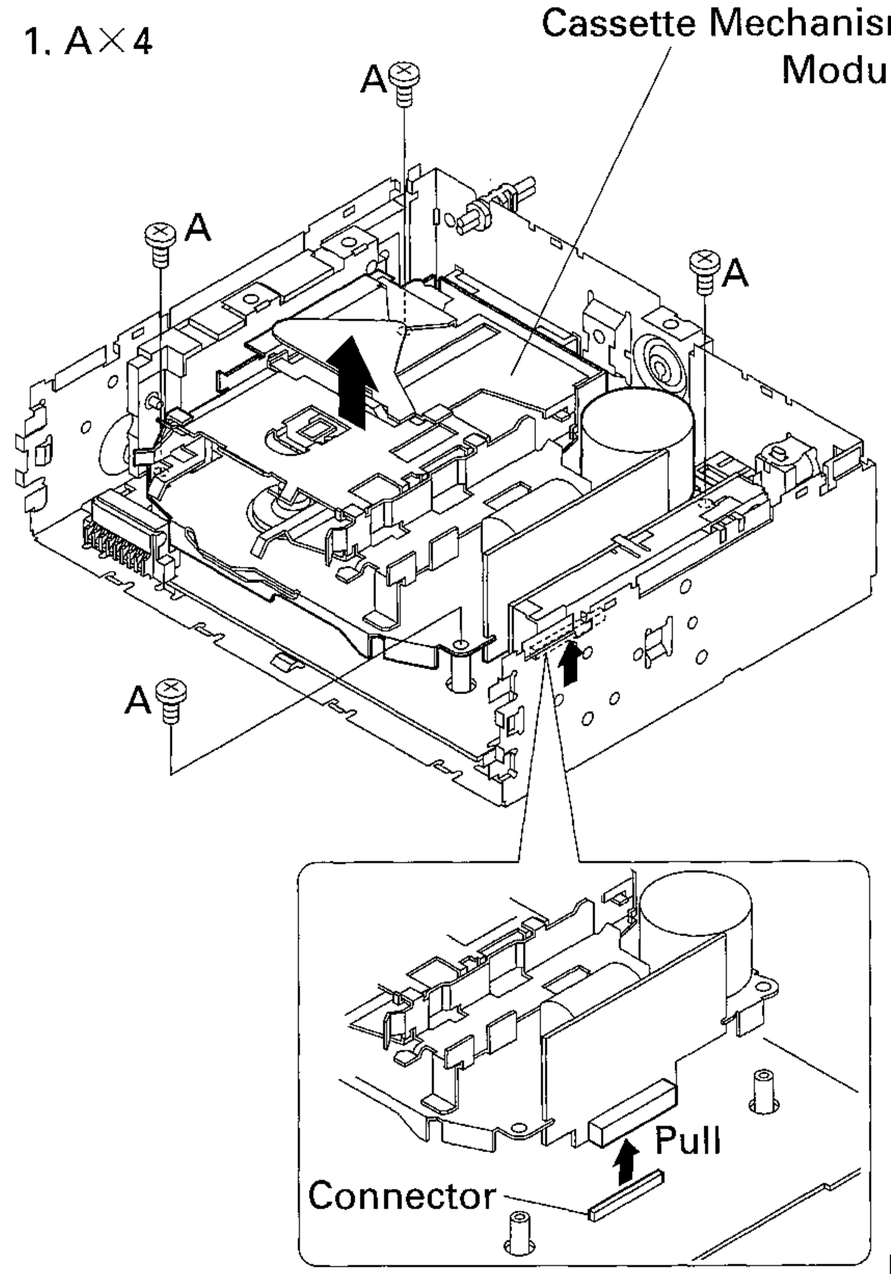

Fig. 32

4. Tuner Amp Unit

1. A×5
2. B×2

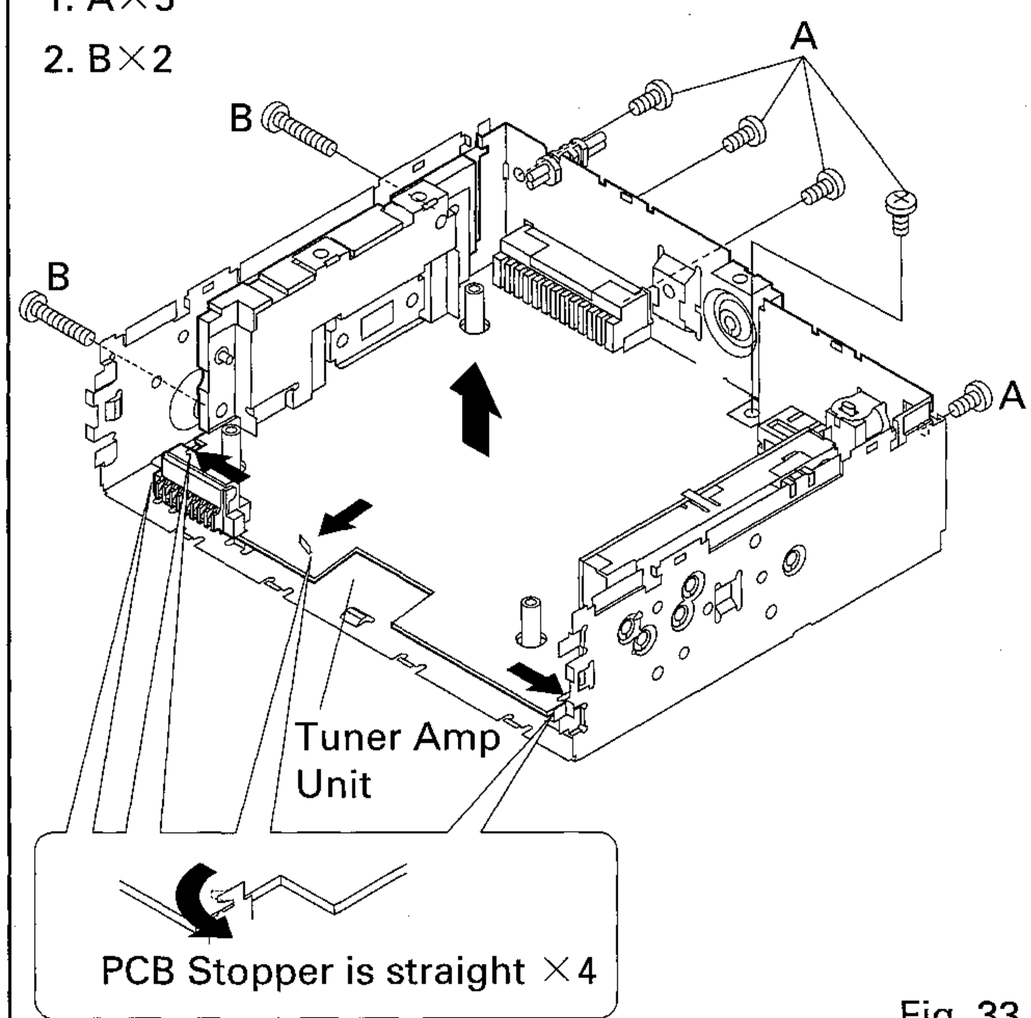

Fig. 33

7.3 BLOCK DIAGRAM

● KEH-P4600R/X1M/EW

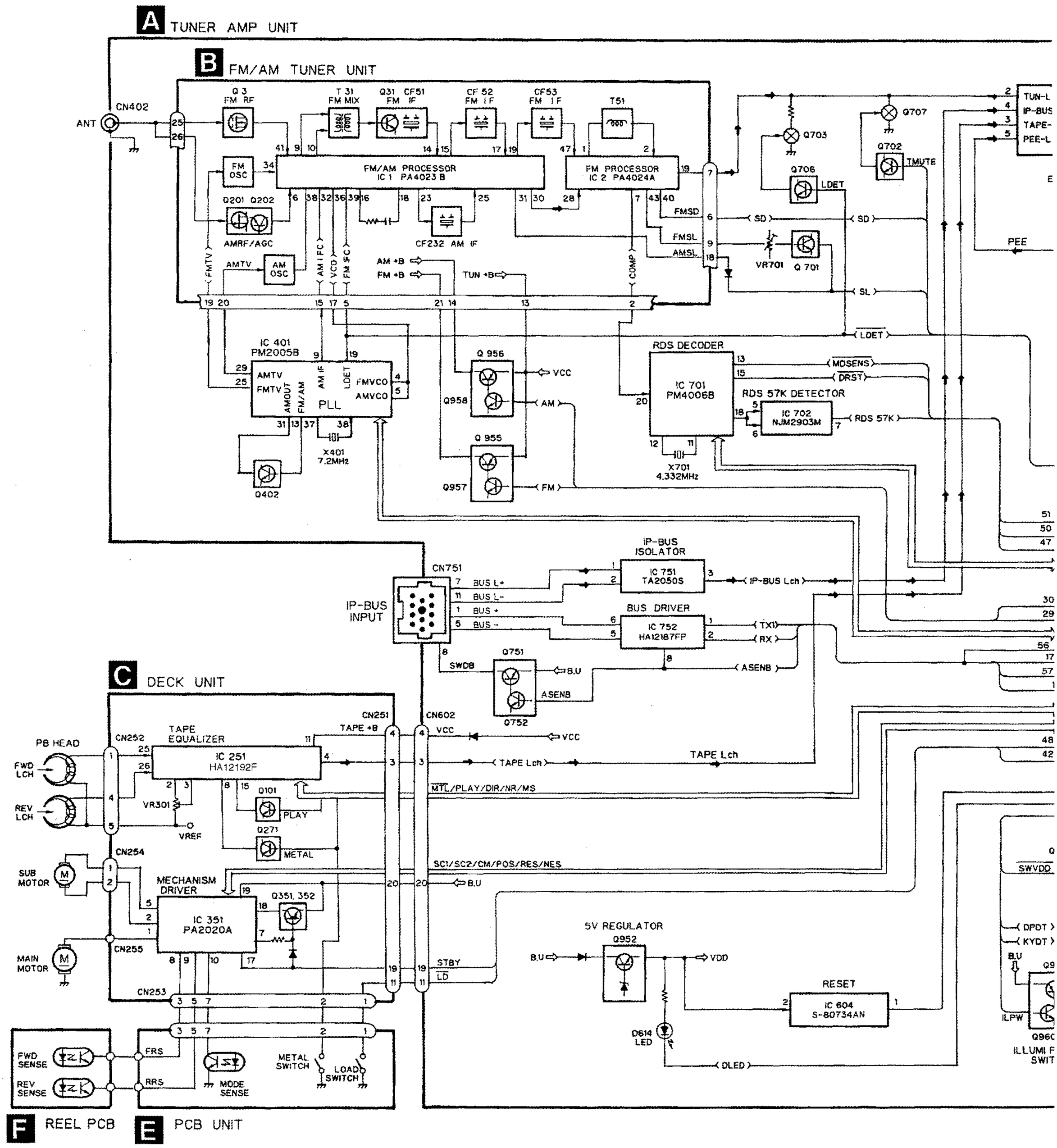

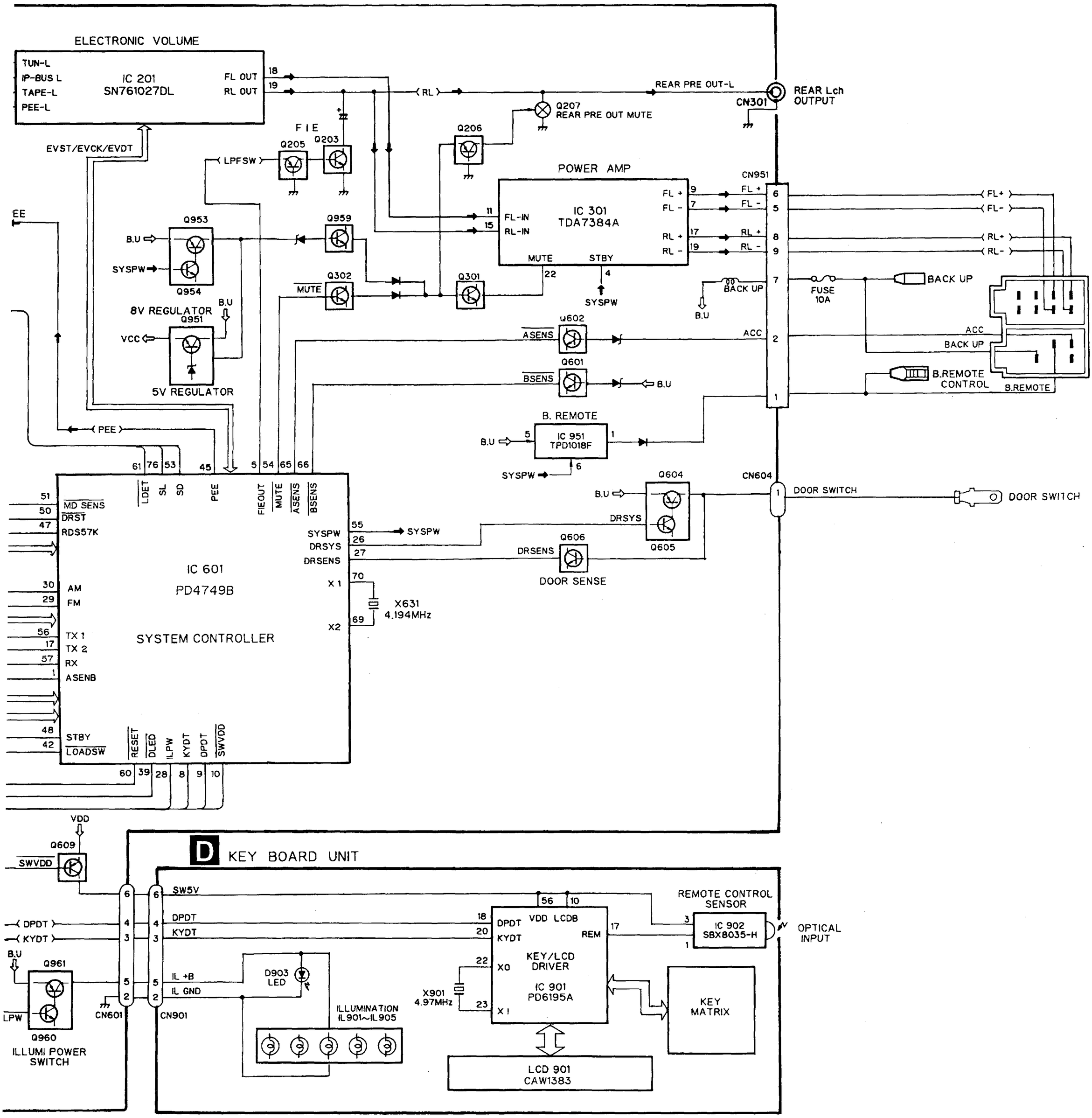
ELECTRONIC VOLUME
TUN-L
IP-BUS L
TAPE-L
PEE-L
IC 201
SN761027DL
FL OUT
RL OUT
REAR PRE OUT-L
REAR Lch OUTPUT
CN301
Q207
REAR PRE OUT MUTE
Q206
F I E
Q205
Q203
EVST/EVCK/EVDT
LPFSW
POWER AMP
IC 301
TDA7384A
FL-IN
RL-IN
MUTE
STBY
SYSPW
CN951
FL +
FL -
RL +
RL -
Q953
Q954
Q959
Q302
Q301
8V REGULATOR
Q951
VCC
5V REGULATOR
BACK UP
FUSE 10A
ACC
B.REMOTE CONTROL
B.REMOTE
Q602
ASENS
Q601
BSENS
B. REMOTE
IC 951
TPD1018F
PEE
IC 601
PD4749B
SYSTEM CONTROLLER
MD SENS
DRST
RDS57K
AM
FM
TX 1
TX 2
RX
ASENB
STBY
LOADSW
LDET
SL
SD
FIEOUT
MUTE
ASENS
BSENS
SYSPW
DRSYS
DRSENS
X1
X2
X631
4.194MHz
Q604
Q605
Q606
DOOR SENSE
CN604
DOOR SWITCH
VDD
Q609
SWVDD
D KEY BOARD UNIT
SW5V
DPDT
KYDT
IL +B
IL GND
CN601
CN901
Q961
Q960
ILLUMI POWER SWITCH
D903 LED
ILLUMINATION IL901~IL905
IC 901
PD6195A
KEY/LCD DRIVER
VDD LCDB
REM
X0
X1
X901
4.97MHz
LCD 901
CAW1383
KEY MATRIX
REMOTE CONTROL SENSOR
IC 902
SBX8035-H
OPTICAL INPUT

Fig. 34

8. OPERATIONS AND SPECIFICATIONS

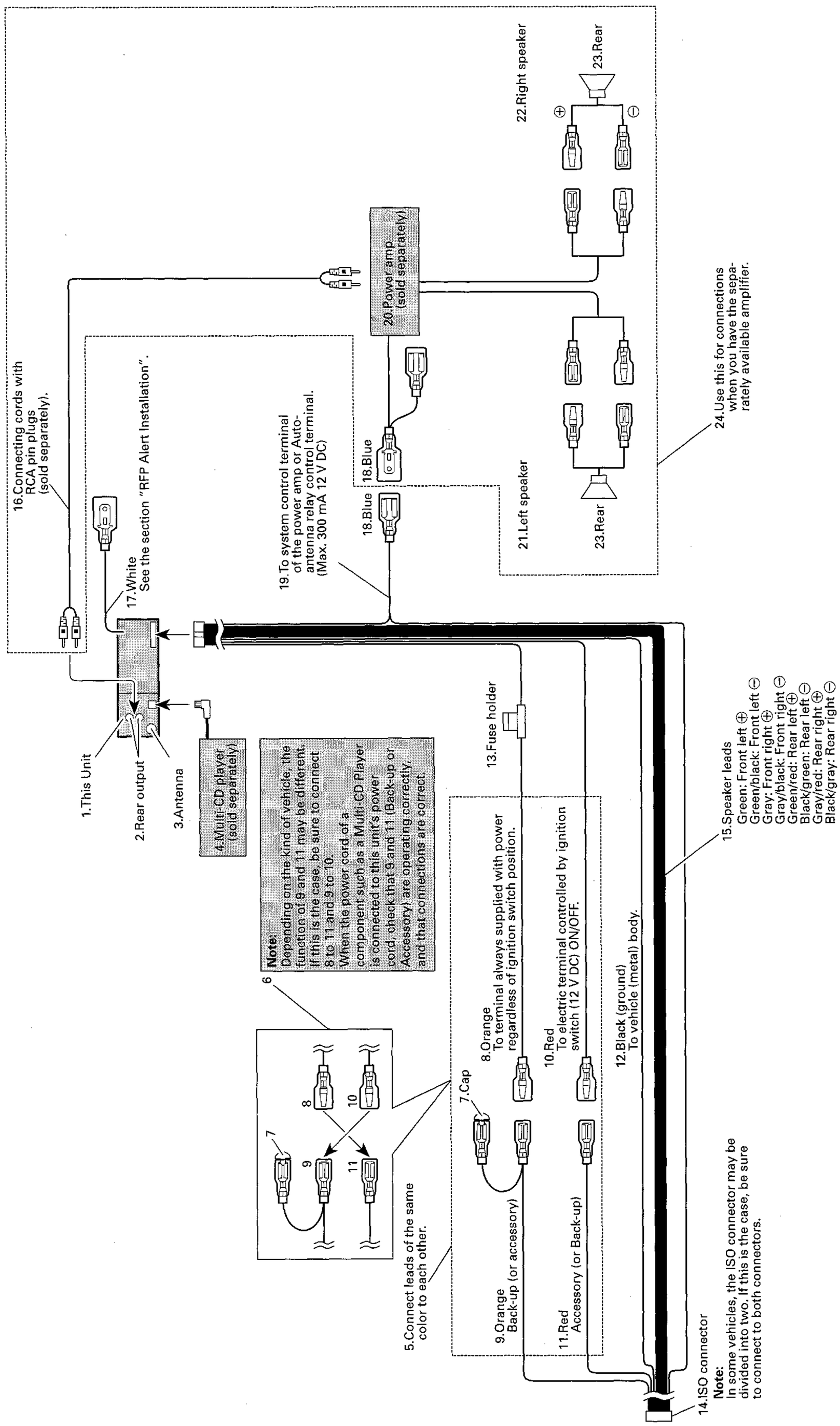

Fig. 35

Key Finder

■ Head Unit

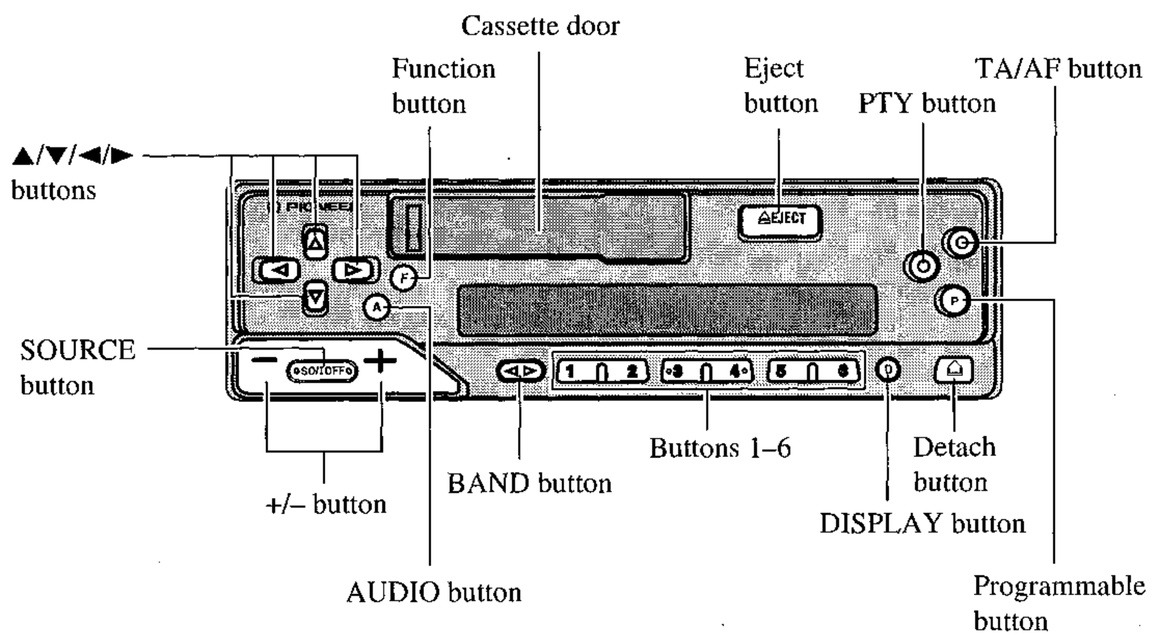

Basic Operation

Switching Power ON/OFF

- **Select the desired source (such as the tuner).**

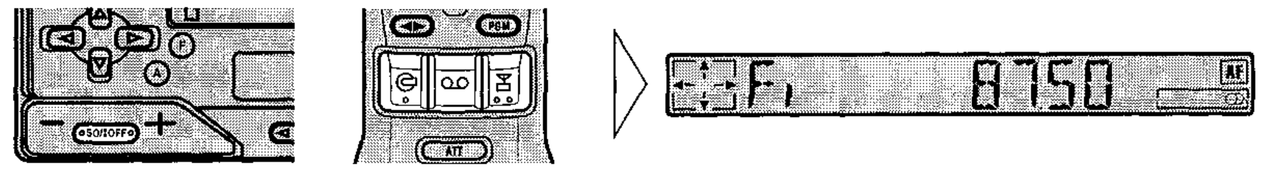

■ Head Unit

Each press of the SOURCE button selects the desired source in the following order:
Tuner → Tape → Multi-CD player → AUX

To switch the sources OFF, hold down the SOURCE button for 1 second or more.

Basic Operation of Tuner

1. Select Tuner. (See page 63.)

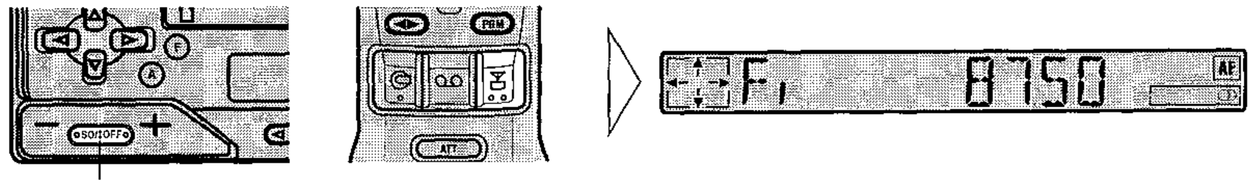

Each press
changes the Source ...

The program service name or frequency appears on the display.
("◯" indicator lights when a stereo station is selected.)

2. Select the desired band.

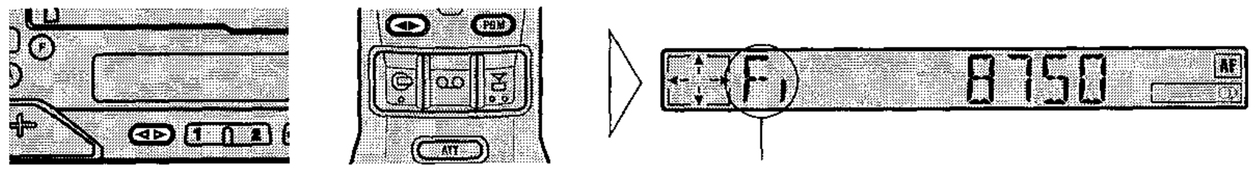

FI → FII → FIII → MW/LW

3. Tune the receiver to a higher or lower frequency.

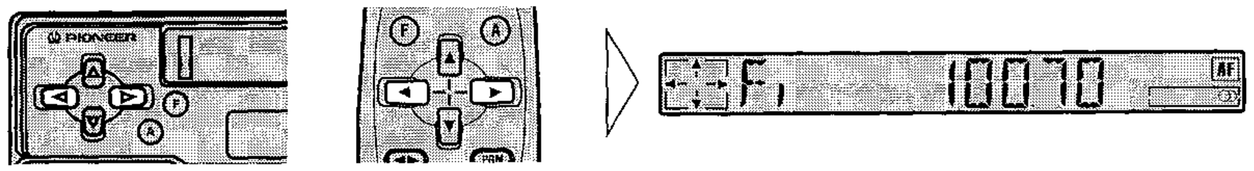

This product's tuner lets you select the tuning by changing the length of the time you press the button.

Manual Tuning (step by step)	0.3 seconds or less
Seek Tuning	0.3 – 2 seconds
Manual Tuning (continuously)	2 seconds or more

Note:
- To select a weak broadcasting station that cannot be tuned in with the Seek Tuning function, tune in with Manual Tuning.

4. Raise or lower the volume.

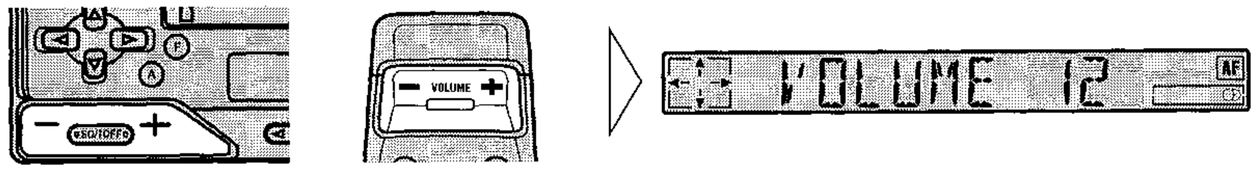

5. Turn the source OFF. (See page 63.)

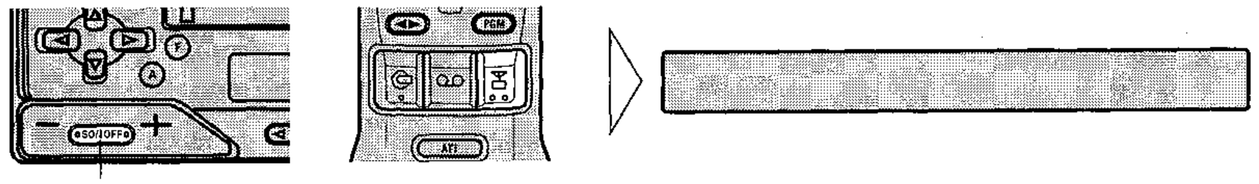

Hold for 1 second

Entering the Function Menu

In this menu you can select tuner functions.

Note:
- REG, TA, PTY, and AF are RDS functions. Refer to "Using RDS Function" for details and instructions on how to use these functions.

- **Select the desired mode in Function Menu.**

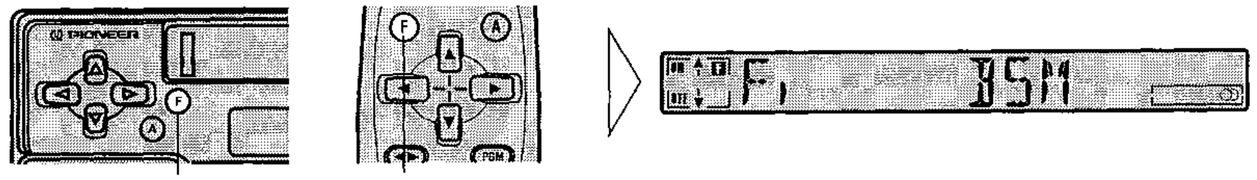

Each press
changes the Mode ...

Each press
changes the Mode ...

Each press of the Function button selects the mode in the following order:
BSM → REG → LOCAL → TA → PTY SELECT → AF

Note:
- You can cancel the Function Menu by pressing the BAND button.
- After selecting the Function Menu, if you do not perform an operation within about 30 seconds, the Function Menu is automatically canceled.

Basic Operation of Cassette Player

1. Insert the cassette tape.

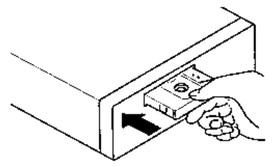

"METAL" appears on the display for 2 seconds when a metal or chrome tape is inserted. Nothing is displayed for a normal tape.

2. Switch tape playback from side A to side B, or vice versa.

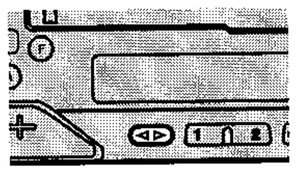

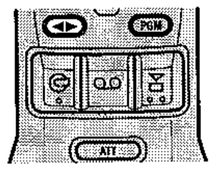

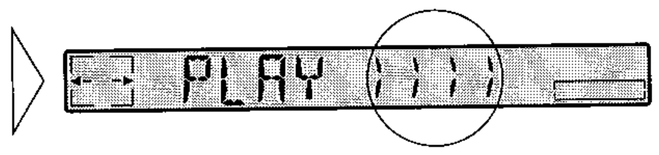

3. Raise or lower the volume.

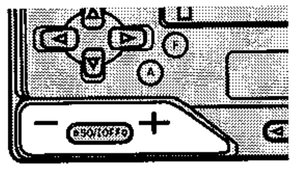

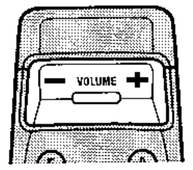

4. Remove the cassette tape.

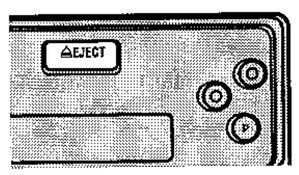

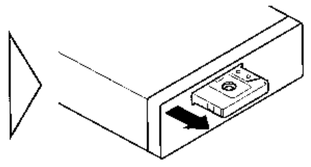

Note:
- The Tape function can be turned ON/OFF with the cassette tape remaining in this product. (See page 63.)

Fast Forward/Rewind and Music Search

■ Fast Forward and Forward-Music Search

While "FF" is displayed, the system fast-forwards the cassette tape to the end of the current side.

While "F-MS" is displayed, the system winds the cassette tape forward to the beginning of the next song, then play begins from that point.

- **Select the desired mode in the following order:**

FF → F-MS → Normal playback

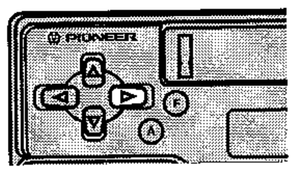

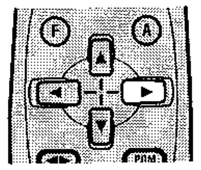

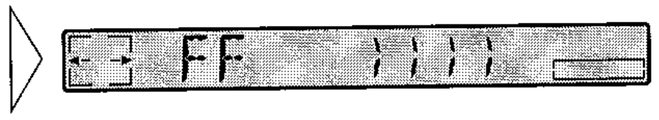

Note:
- Fast Forward (FF) and Forward-Music Search (F-MS) can be canceled by pressing the BAND button during FF or F-MS operation.

■ Rewind and Rewind-Music Search

While "REW" is displayed, the system rewinds the cassette tape to the beginning of the current side.

While "R-MS" is displayed, the system rewinds the cassette tape to the beginning of the current song, then play begins from that point.

- **Select the desired mode in the following order:**

REW → R-MS → Normal playback

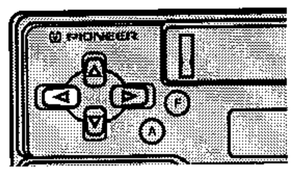

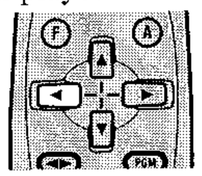

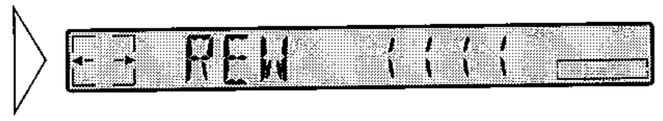

Note:
- Rewind (REW) and Rewind-Music Search (R-MS) can be canceled by pressing the BAND button during the REW or R-MS operation.

Using the Cassette Player

Entering the Function Menu

In this menu you can select Tape functions.

- **Select the desired mode in Function Menu.**

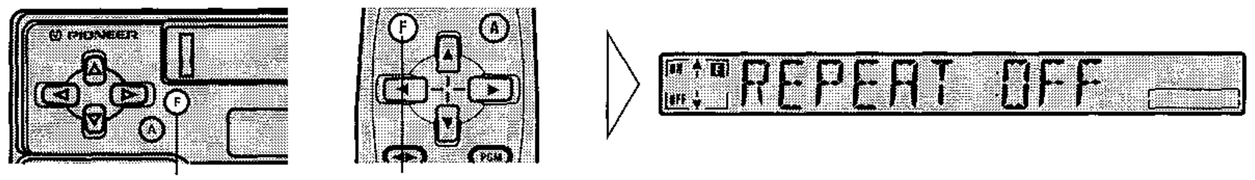

Each press changes the Mode ...

Each press changes the Mode ...

Each press of the Function button selects the mode in the following order:
REPEAT → B SKIP → RI → B NR

Note:
- You can cancel the Function Menu by pressing the BAND button.
- After selecting the Function Menu, if you do not perform an operation within about 30 seconds, the Function Menu is automatically canceled.

Radio Intercept

This function allows you to listen to the radio during tape fast-forwarding/rewinding.

Note:
- The radio intercept function does not work during a Music Search operation.

1. **Select the Radio Intercept mode in the Function Menu.**
2. **Switch the Radio Intercept mode ON or OFF.**

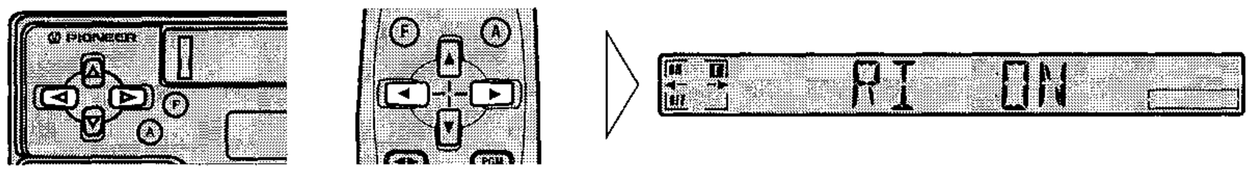

Note:
- Pressing the BAND button cancels the Function Menu.

Using Multi-CD Players

This product can control one or more multi-CD players.

Basic Operation of Multi-CD Players

1. **Select the multi-CD player source. (See page 63.)**

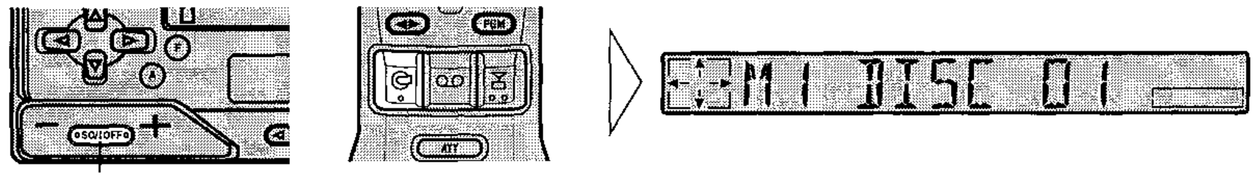

Each press changes the Source ...

Note:
- The multi-CD player may perform a preparatory operation, such as verifying the presence of a disc or reading disc information, when the power is turned ON or a new disc is selected for playback. "READY" is displayed.
- If the multi-CD player cannot operate properly, an error message such as "ERROR 14" is displayed. Refer to the multi-CD player owner's manual.

2. **Select the desired disc.**

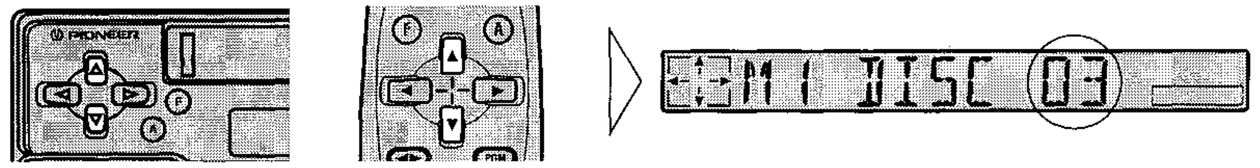

3. **Reverse or advance track by track.**

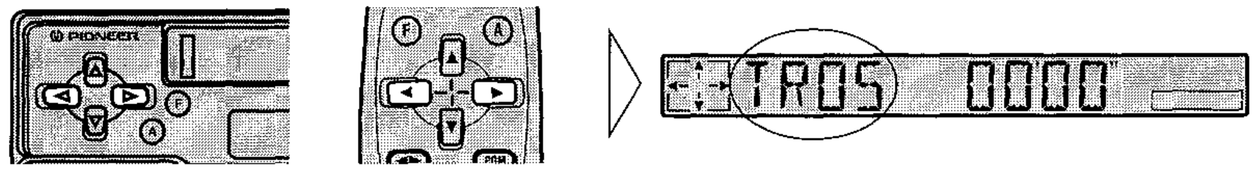

4. **Raise or lower the volume.**

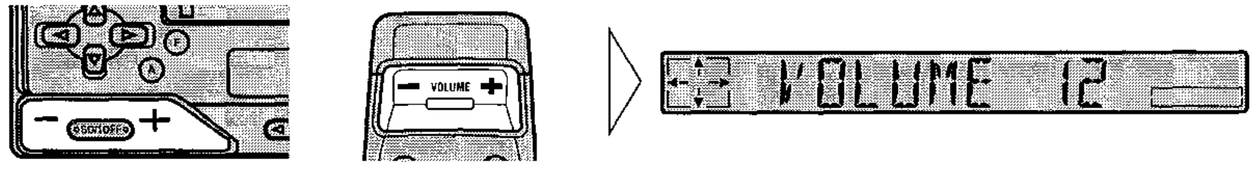

5. **Turn the source OFF. (See page 63.)**

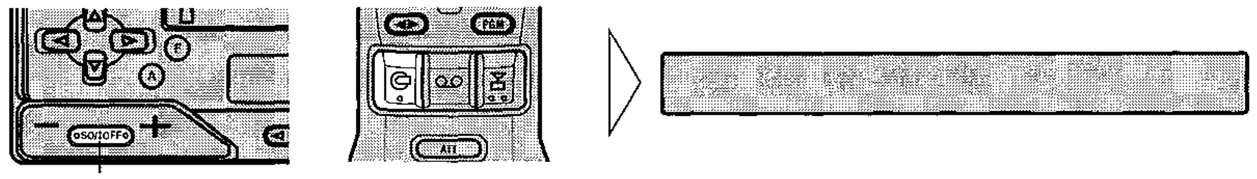

Hold for 1 second

Switching the Multi-CD Player

It is possible to connect up to three multi-CD players by means of a multi-ple installation adapter. When two or more multi-CD players are installed, their priorities must be specified. Follow the multi-CD player instructions carefully, and set the address switches properly.

- **Select the multi-CD player you want to use.**

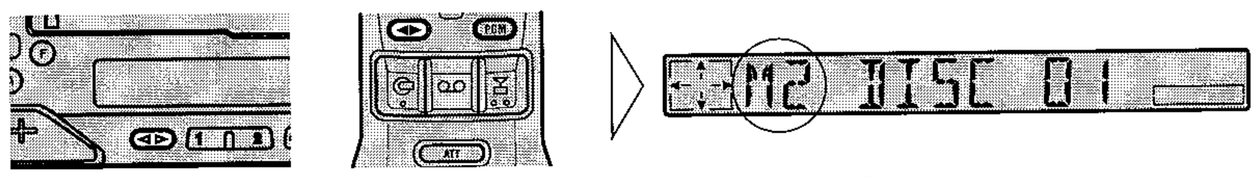

M1 → M2 → M3

Disc Number Search

■ Disc Number Search (for 6-Disc, 12-Disc types)

You can select discs directly with the 1 to 6 buttons. Just press the number corresponding to the disc you want to listen to.

Note:
- When a 12-Disc Multi-CD Player is connected and you want to select disc 7 to 12, press the 1 to 6 buttons for 2 seconds or longer.

- **Select the desired disc. (eg. Press button 3.)**

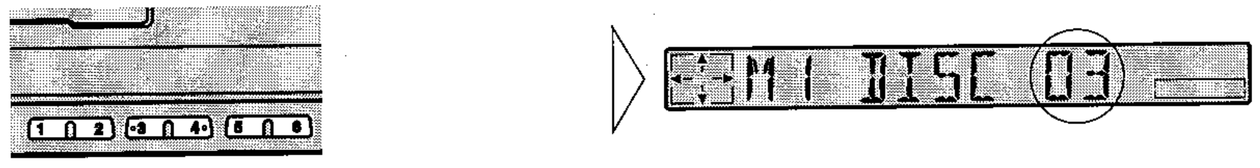

■ Disc Number Rough Search (for 50-Disc type only)

This handy function lets you select discs loaded in a 50-Disc Multi-CD Player using the 1 to 5 buttons. The 50 discs are divided into five blocks, with each of the 1 to 5 buttons assigned to a block.
For example, if you press button 1, discs 10 through 19 are searched in order, and then the disc with the lowest disc number is selected.

Note:
- Pressing button 5 lets you select the 50th disc only.
- Button 6 does not operate.
- Rough search of discs 1 to 9 is not possible. Use the ▲/▼ buttons to select a desired disc.

1. **Press the appropriate button from 1 to 5 to select the block containing the desired disc. (eg. Press button 4.)**

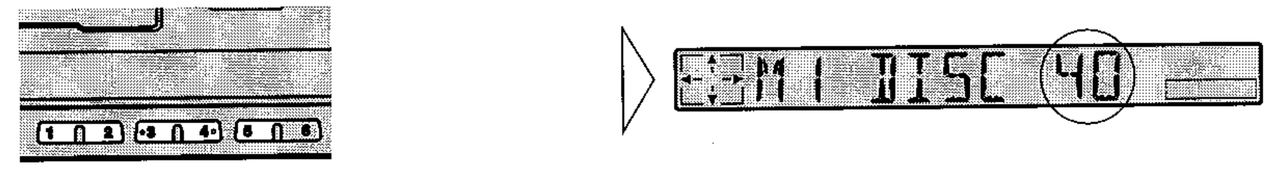

2. **Select the desired disc.**

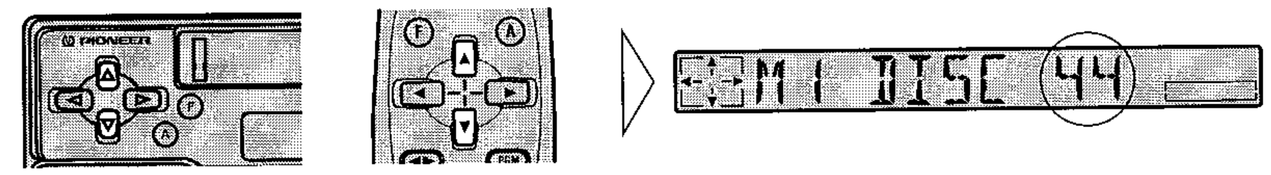

Track Search and Fast-forward/Reverse

Besides Track Search convenience when searching for a desired track, this unit also lets you fast-forward and reverse through tracks to find a desired phrase or section of music.

■ Track Search

This feature enables you to advance or reverse track by track.

- **Reverse or advance track by track.**

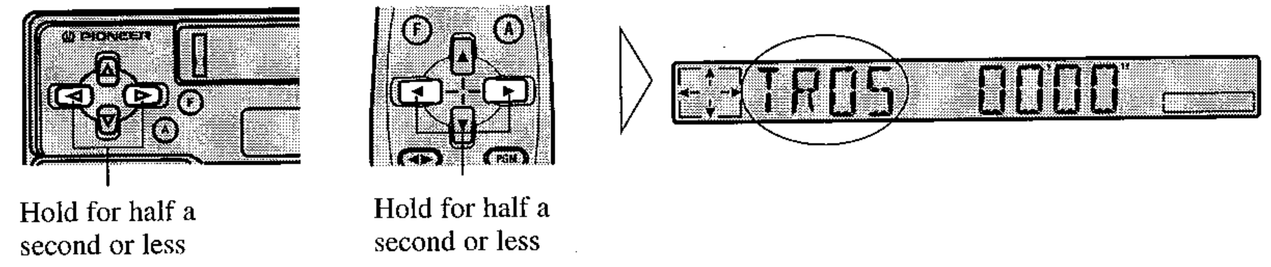

■ Fast-forward/Reverse

This feature enables you to advance or reverse at high speed between tracks.

- **Reverse or fast-forward through tracks.**

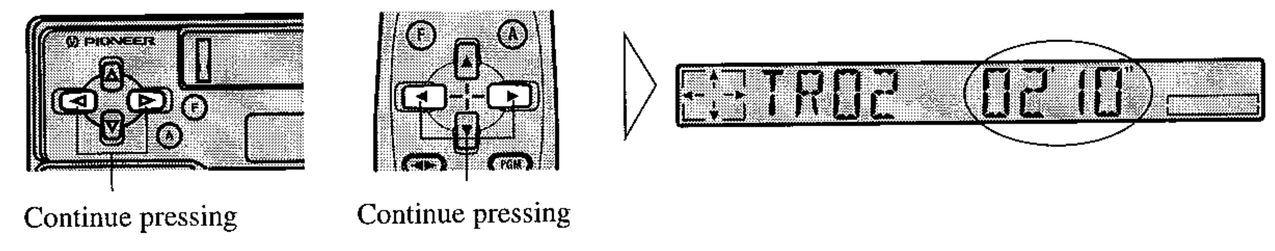

Using Multi-CD Players

Entering the Function Menu

In this menu you can select Multi-CD Player functions.

- **Select the desired mode in Function Menu.**

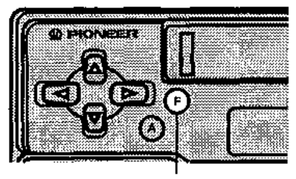

Each press
changes the Mode ...

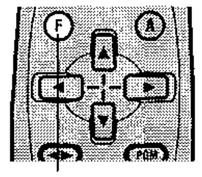

Each press
changes the Mode ...

Each press of the Function button selects the mode in the following order:
REPEAT → RANDOM → ITS P → PAUSE

Note:
- You can cancel the Function Menu by pressing the BAND button.
- After selecting the Function Menu, if you do not perform an operation within about 30 seconds, the Function Menu is automatically canceled.
- Pressing the BAND button cancels the Function Menu.

Specifications

General

Power source ..... 14.4 V DC (10.8 – 15.1 V allowable)
Grounding system ..... Negative type
Max. current consumption ..... 8.5 A
Dimensions
(mounting size) .... 178 (W) × 50 (H) × 150 (D) mm
(front face) ..... 188 (W) × 58 (H) × 19 (D) mm
Weight ..... 1.2 kg

Amplifier

Maximum power output ..... 35 W × 4
Continuous power output ..... 22 W × 4
(DIN45324, +B = 14.4 V)
Load impedance ..... 4 Ω (4 – 8 Ω allowable)
Preout output level/output impedance ..... 500 mV/1 kΩ
Tone controls
(Bass) ..... ±12 dB (100 Hz)
(Treble) ..... ±12 dB (10 kHz)
Loudness contour ..... +10 dB (100 Hz), +7 dB (10 kHz)
(volume: –30 dB)

Cassette player

Tape ..... Compact cassette tape (C-30 – C-90)
Tape speed .... 4.76 cm/sec. (+0.14 cm/sec. -0.05 cm/sec.)
Fast forward/rewinding time .. Approx. 100 sec. for C-60
Wow & flutter ..... 0.09% (WRMS)
Frequency response ..... Metal: 30 – 19,000 Hz (±3 dB)
Stereo separation ..... 45 dB
Signal-to-noise ratio
..... Metal: Dolby B NR IN: 67 dB (IEC-A network)
Dolby NR OUT: 61 dB (IEC-A network)

FM tuner

Frequency range (EW,EE) ..... 87.5 – 108 MHz
(EE) .....65 – 74 MHz
Usable sensitivity
..... 11 dBf (1.0 μV/75 Ω, mono, S/N: 30 dB)
50 dB quieting sensitivity .... 16 dBf (1.7 μV/75 Ω, mono)
Signal-to-noise ratio ..... 70 dB (IEC-A network)
Distortion ..... 0.3% (at 65 dBf, 1 kHz, stereo)
Frequency response ..... 30 – 15,000 Hz (±3 dB)
Stereo separation ..... 40 dB (at 65 dBf, 1 kHz)

MW tuner

Frequency range ..... 531 – 1,602 kHz
Usable sensitivity ..... 18 μV (25 dB) (S/N: 20 dB)
Selectivity ..... 50 dB (±9 kHz)

LW tuner

Frequency range ..... 153 – 281 kHz
Usable sensitivity ..... 30 μV (30 dB) (S/N: 20 dB)
Selectivity ..... 50 dB (±9 kHz)

Note:
- Specifications and the design are subject to possible modification without notice due to improvements.